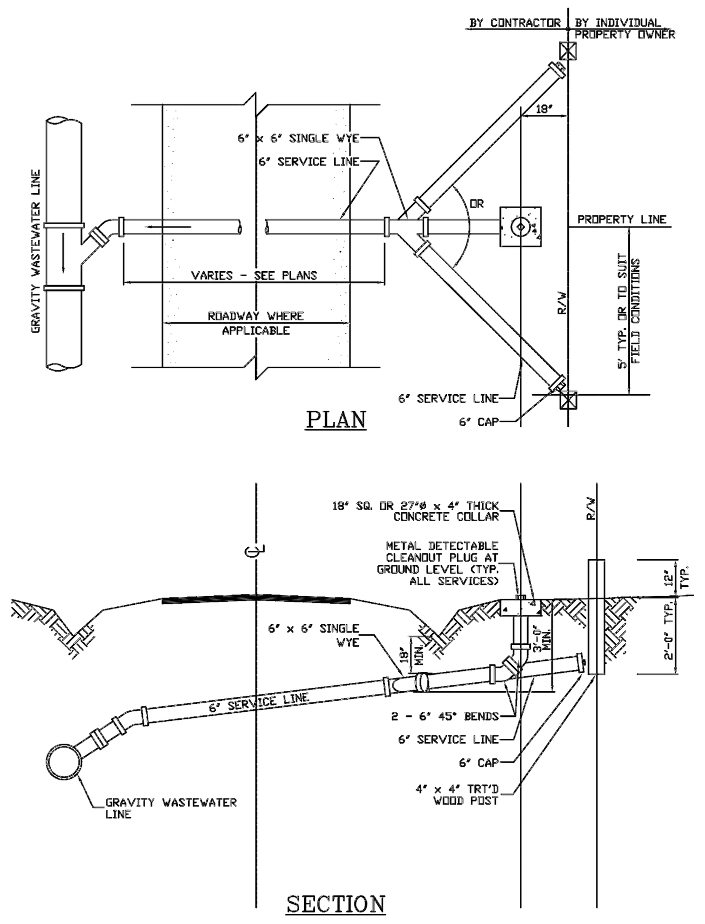

NOTE: WHEN REQUIRED TO BORE & JACK UNDER ROADWAY CONTRACTOR WILL USE 6" PVC FOR SERVICE LINE

GEORGETOWN COUNTY WATER & SEWER DISTRICT

TYPICAL SINGLE SERVICE LINE CONNECTION & CLEANOUT ASSEMBLY

DATE	SCALE	NO.
DRAWN	CHECKED	

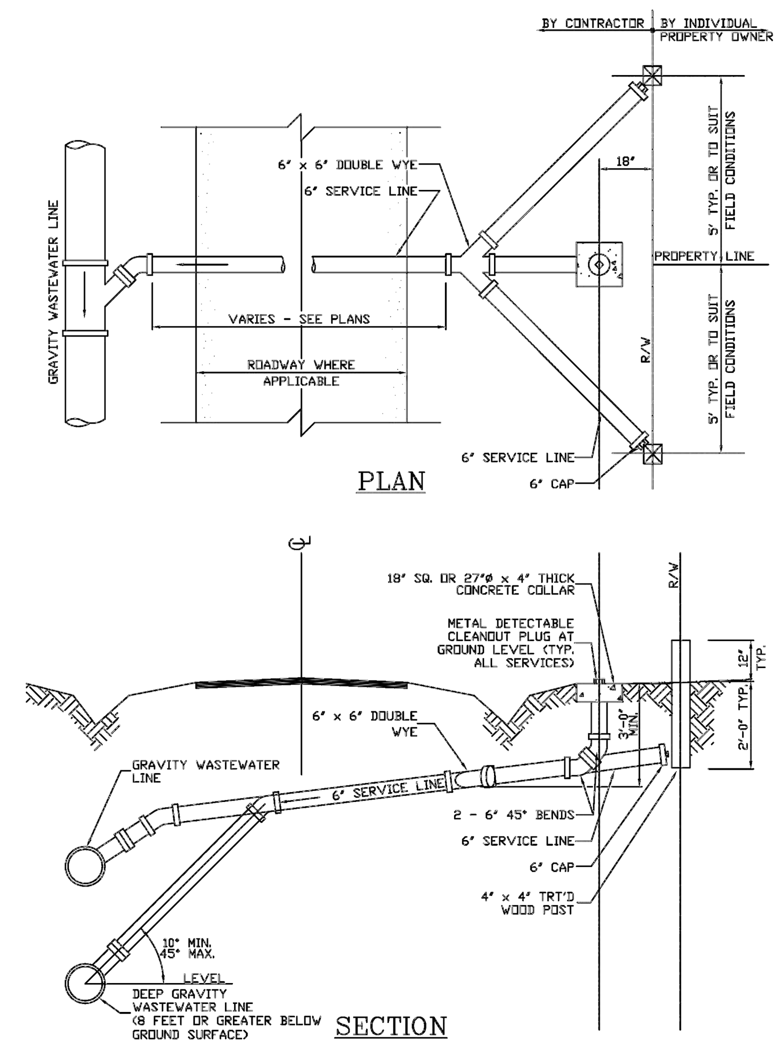

GEORGETOWN COUNTY WATER & SEWER DISTRICT

TYPICAL DOUBLE SERVICE LINE CONNECTION & CLEANOUT ASSEMBLY

DATE	SCALE	NO.
DRAWN	CHECKED	

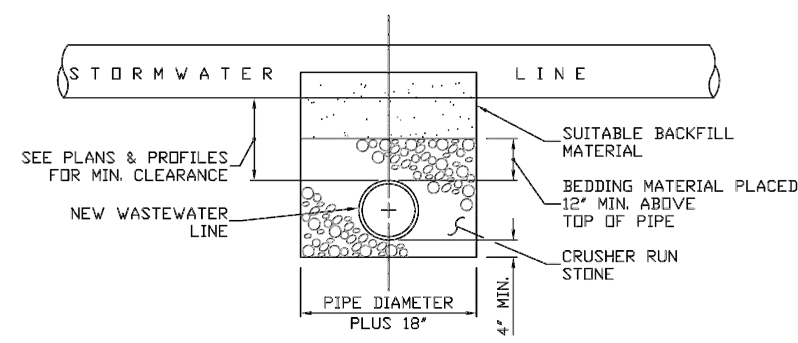

NOTE: IF LESS THAN 18" CLEARANCE, CENTER 18 L.F. OF D.I.P. AT CROSSING FOR BOTH UTILITY LINES

GEORGETOWN COUNTY WATER & SEWER DISTRICT

WASTEWATER LINE CROSSING BELOW STORMWATER LINE - SECTION

DATE	SCALE	NO.
DRAWN	CHECKED	

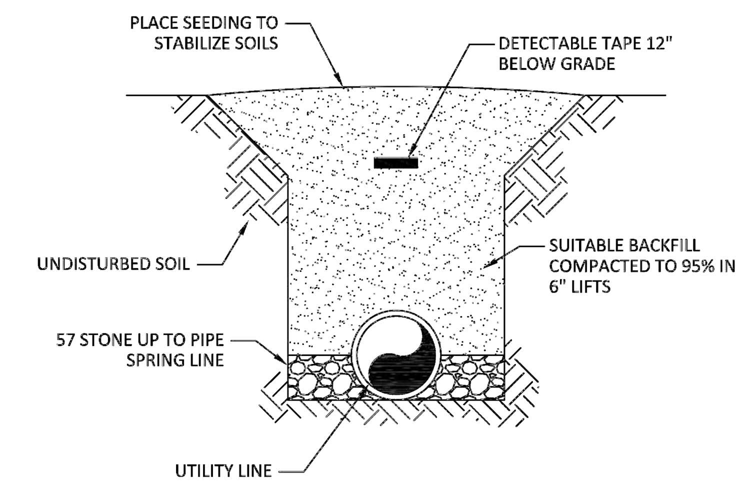

NOTES:

1. FOR THE UTILITY LINE INSTALLATION THROUGH DRIVEWAYS REFER TO THE ASPHALT PAVEMENT REPAIR DETAIL.

GEORGETOWN COUNTY WATER & SEWER DISTRICT

TYPICAL TRENCH IN GRASSED AREA

UPDATED 10/02/14	SCALE N.T.S.	NO.
DRAWN A.J.K.	CHECKED	

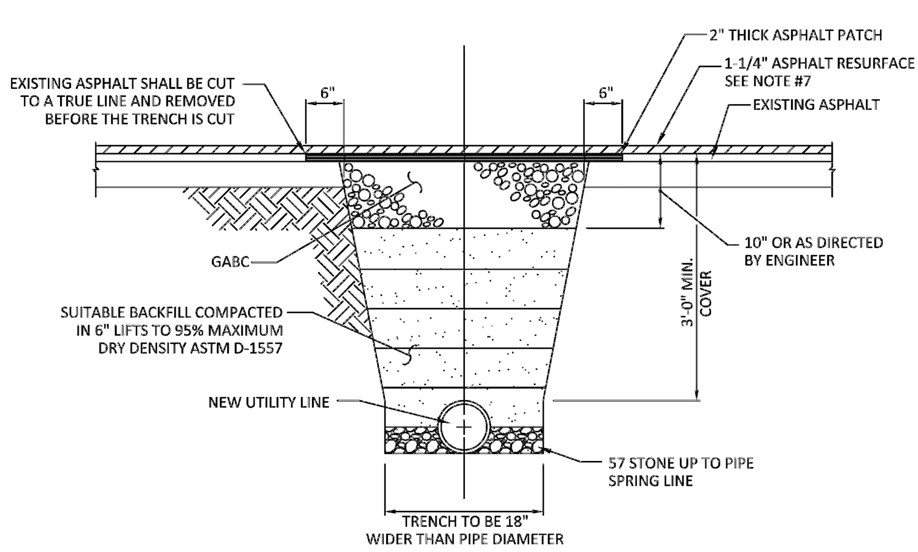

SECTION

NOTES:

1. ALL REPAIRS TO BE IN ACCORDANCE WITH SCDOT SPECIFICATIONS AND THESE SPECIFICATIONS.
2. TRENCH SHALL BE BACKFILLED AND THOROUGHLY TAMPED WITH SUITABLE MATERIAL TO THE LEVEL OF THE STONE.
3. REPAIRS BY THE CONTRACTOR SHALL BE CONDUCTED WITH THE LEAST INTERFERENCE TO TRAFFIC.
4. WHERE EXISTING ASPHALT IS INSUFFICIENT THICKNESS TO DEVELOP A TIGHT SEAL WITH THE NEW SURFACE, OVERLAP EXISTING SURFACE AS PER SPECIFICATIONS.
5. SEE SPECS. FOR UTILITY LINE BEDDING/BACKFILL REQUIREMENTS.
6. 3'-0" MINIMUM COVER FOR WATER MAINS AND WASTEWATER LINES.
7. ASPHALT DRIVEWAYS IN SCDOT RIGHT-OF-WAY TO BE RESURFACED FROM EDGE OF PAVEMENT TO THE RIGHT-OF-WAY LINE. SEE ASPHALT DRIVEWAY RESURFACING PLAN DETAIL.
8. INSTALL 10' BASE COURSE TO TOP OF EXISTING ASPHALT. EXCAVATE 2" BASE COURSE TO PLACE ASPHALT COURSE (TYPE 3) FLUSH TO EXISTING ASPHALT.

GEORGETOWN COUNTY WATER & SEWER DISTRICT

UTILITY MAIN IN PAVED DRIVE

UPDATED 10/02/14	SCALE N.T.S.	NO.
DRAWN A.J.K.	CHECKED	

NOTES:

1. THE FOLLOWING CONDITIONS WERE USED TO CALCULATE THE RESTRAINED LENGTHS SHOWN IN THE TABLE:
   - LAYING CONDITION IS TYPE 3
   - SOIL DESIGNATED AS SAND–SILT
   - DEPTH IS 3 FT.
   - DESIGN PRESSURE (TEST) IS 150 P.S.I.
   - SAFETY FACTOR IS 1.5
   - PIPE IS POLYETHYLENE ENCASED

   FOR THE TEE BRANCH AND REDUCER, LENGTHS ARE BASED ON BRANCHING AND REDUCING FROM THE NEXT LARGER SIZE IN THE TABLE. TEE BRANCH LENGTH BASED ON RUN LENGTH TO FIRST JOINT OF 10 FT. DEVIATIONS FROM THESE CONDITIONS MUST BE BASED ON THE ABOVE PARAMETERS.
2.
3. THE FOLLOWING RESTRAINING GLANDS AND GASKETS ARE APPROVED PRODUCTS:

   FOR DUCTILE IRON PIPE
   - AMERICAN CAST IRON PIPE – FAST GRIP, FLEX–RING, FIELD FLEX–RING, OR LOCK–RING
   - US PIPE – TR FLEX OR FIELD LOK 350 GASKETS
   - GRIFFIN PIPE – SNAP–LOK RESTRAINED JOINT, OR TALON RJ GASKET
   - EBAA – MEGALUG RESTRAINT GLAND
   - FORD – SERIES 1400 RESTRAINT GLAND
   - SIGMA – ONE–LOK SERIES SLD RESTRAINT GLAND
   - MCWANE – SURE STOP 350 RESTRAINT GASKET

   FOR PVC PIPE
   - EBAA MEGALUG SERIES 2000PV
   - FORD SERIES 1500 WILL BE USED ON EXISTING PVC PIPE

NOTE: REFER TO GCW&SD MINIMUM STANDARDS FOR APPROVED RESTRAINING METHODS AND APPROVED PRODUCTS.

RESTRAINT JOINT TABLE

RESTRAIN ALL JOINTS WITHIN THESE LENGTHS

(IN L.F. EACH SIDE OF THE FITTING)

SIZE	11 1/4°	22 1/2°	45°	90°	TEE BRANCH	DEAD END	REDUCER
4"	2	5	10	24	38	61	44
6"	4	7	14	33	64	85	47
8"	5	9	18	44	91	111	45
10"	6	11	22	52	113	132	46
12"	6	12	25	60	133	155	84
16"	8	16	32	76	177	198	84
20"	9	18	38	91	218	238	83
24"	11	21	43	104	255	277	116

*RESTRAINED JOINTS SHALL BE IN ACCORDANCE WITH THE DUCTILE IRON PIPE RESEARCH ASSOCIATION (DIPRA) STANDARDS FOR ALL FITTINGS. FITTINGS OF OTHER SIZES, CHANGES IN CONDITIONS, ETC. NOT IN THIS TABLE SHALL BE IN ACCORDANCE WITH DIPRA STANDARDS.

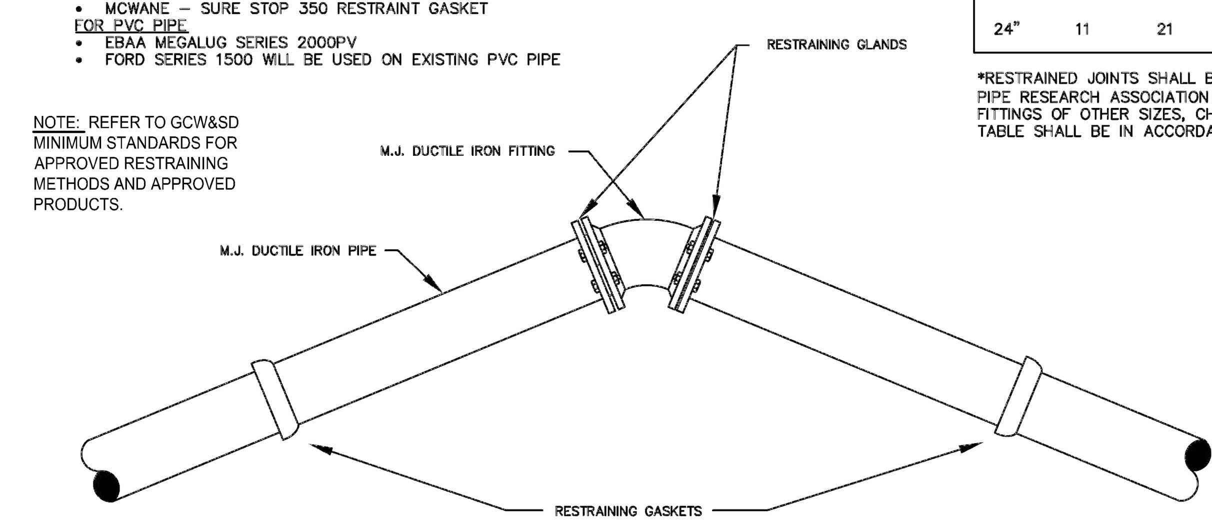

RESTRAINED JOINT FITTING
(HORIZONTAL PIPE ONLY)
NOT TO SCALE

GEORGETOWN COUNTY WATER & SEWER DISTRICT

NOTES:

1. THE FOLLOWING CONDITIONS WERE USED TO CALCULATE THE RESTRAINED LENGTHS SHOWN IN THE TABLE:
   - LAYING CONDITION IS TYPE 3
   - SOIL DESIGNATED AS SAND–SILT
   - DEPTH IS 3 FT.
   - DESIGN PRESSURE (TEST) IS 150 P.S.I.
   - SAFETY FACTOR IS 1.5
   - PIPE IS POLYETHYLENE ENCASED

   FOR THE TEE BRANCH AND REDUCER, LENGTHS ARE BASED ON BRANCHING AND REDUCING FROM THE NEXT LARGER SIZE IN THE TABLE. TEE BRANCH LENGTH BASED ON RUN LENGTH TO FIRST JOINT OF 10 FT. DEVIATIONS FROM THESE CONDITIONS MUST BE BASED ON THE ABOVE PARAMETERS.
2.
3. THE FOLLOWING RESTRAINING GLANDS AND CLAMP ASSEMBLIES ARE APPROVED PRODUCTS:
   - EBBA 1500 TD FOR DUCTILE IRON AND PVC PIPE UP TO 12"
   - EBBA 1100 HD FOR DUCTILE IRON PIPE 10" AND GREATER
   - FORD UFR SERIES 1490

NOTE: REFER TO GCW&SD MINIMUM STANDARDS FOR APPROVED RESTRAINING METHODS AND APPROVED PRODUCTS.

RESTRAINT JOINT TABLE

RESTRAIN ALL JOINTS WITHIN THESE LENGTHS

(IN L.F. EACH SIDE OF THE FITTING)

SIZE	11 1/4°	22 1/2°	45°	90°	TEE BRANCH	DEAD END	REDUCER
4"	2	5	10	24	38	61	44
6"	4	7	14	33	64	85	47
8"	5	9	18	44	91	111	45
10"	6	11	22	52	113	132	46
12"	6	12	25	60	133	155	84
16"	8	16	32	76	177	198	84
20"	9	18	38	91	218	238	83
24"	11	21	43	104	255	277	116

*RESTRAINED JOINTS SHALL BE IN ACCORDANCE WITH THE DUCTILE IRON PIPE RESEARCH ASSOCIATION (DIPRA) STANDARDS FOR ALL FITTINGS. FITTINGS OF OTHER SIZES, CHANGES IN CONDITIONS, ETC. NOT IN THIS TABLE SHALL BE IN ACCORDANCE WITH DIPRA STANDARDS.

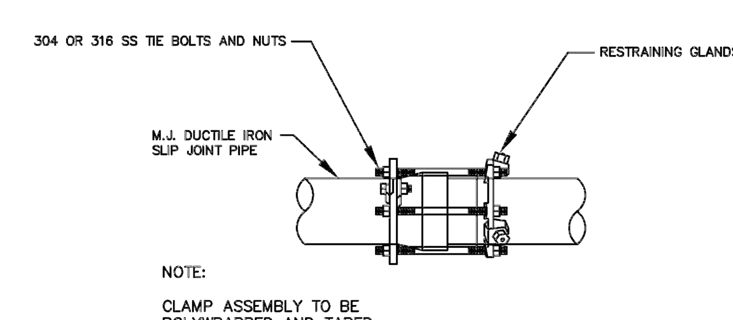

NOTE:

CLAMP ASSEMBLY TO BE POLYWRAPPED AND TAPED.

TYPICAL BELL JOINT CLAMP
(FOR RESTRAINING EXISTING PIPE ONLY)
NOT TO SCALE

GEORGETOWN COUNTY WATER & SEWER DISTRICT

UTILITY NOTES:

1. CONTRACTOR TO COORDINATE WATER LINE AND SEWER LINE REPLACEMENT WITH GEORGETOWN COUNTY WATER AND SEWER DISTRICT (GCW&SD) AND GIVE 5 WORKING DAYS OF NOTICE BEFORE STARTING ANY WORK.
2. CONTRACTOR TO COORDINATE WITH RESPECTIVE UTILITY PROVIDERS ON RELOCATION OF EXISTING UNDERGROUND UTILITIES. OTHER PRIVATE UTILITIES MAY EXIST WITHIN PROJECT WORK AREA. CONTRACTOR SHALL COORDINATE RELOCATION OF ALL PRIVATE UTILITIES WITH OWNER'S PRIOR TO CONSTRUCTION.
5. CONTRACTOR IS RESPONSIBLE FOR PAYMENT/COST OF ALL UTILITY RELOCATIONS ASSOCIATED WITH THIS PROJECT.
6. EXISTING WATER AND SEWER UTILITIES SHALL REMAIN ONLINE THROUGHOUT CONSTRUCTION. CONTRACTOR SHALL COORDINATE PLANS FOR MAINTAINING SERVICE THROUGHOUT CONSTRUCTION WITH GCW&SD AND SHALL GAIN APPROVAL FOR PROPOSED UTILITY REPLACEMENT PLANS FROM GCW&SD PRIOR TO CONSTRUCTION.
7. CONTRACTOR SHALL SUBMIT SHOP DRAWINGS FOR ALL UTILITY RELATED MATERIALS TO THE ENGINEER AND TO GCW&SD FOR APPROVAL PRIOR TO BEGINNING CONSTRUCTION. CONTRACTOR SHALL ALSO SUBMIT LICENSE AND INSURANCE INFORMATION TO GCW&SD FOR THE CONTRACTOR WHO IS RESPONSIBLE FOR UTILITY WORK PRIOR TO BEGINNING CONSTRUCTION. THIS INFORMATION SHALL BE APPROVED BY GCW&SD PRIOR TO THE START OF CONSTRUCTION.
8. CONTRACTOR IS RESPONSIBLE FOR ALL SANITARY SEWER BYPASS PUMPING OPERATIONS AS REQUIRED. COST FOR BYPASS PUMPING OPERATIONS SHALL BE INCLUDED IN BID ITEM FOR UTILITY RELOCATIONS.
9. ALL VALVES SHALL OPEN LEFT (COUNTERCLOCKWISE) AND CLOSE RIGHT (CLOCKWISE).
10. WATER MAIN RELOCATIONS: LOCATE AND TURN OFF WATER MAIN VALVE EACH SIDE OF WORK LIMITS. COORDINATE THE INSTALLATION OF NEW VALVES AS REQUIRED W/ GCW&SD AND TURN OFF TO ISOLATE SECTION OF EXISTING WATER LINE THROUGH WORK LIMITS.
11. WATER MAIN RELOCATIONS: VERIFY EXISTING WATER LINE MATERIAL. IF PIPE IS ACP THEN REPLACE WITH PVC THROUGH WORK LIMITS. EXPOSE AND INSTALL BELL AND FITTING RESTRAINTS ON EX. OR REPLACED WATER LINE (SEE DETAILS).
12. WATER MAIN RELOCATIONS: INSTALL NEW 10" C900 PVC WATER MAIN IN LOCATION SHOWN ON PLAN AND AT ELEVATIONS SHOWN ON PROFILES PROVIDING 18" VERTICAL SEPARATION AND USING RESTRAINED JOINTS.

811
Know what's **below.**
Call before you dig.

V:\1784\active\178420615\urban Land\Drawings\Sheets\revised\phase_2\20615-details_p2.dwg
2017/12/04 10:03 AM By: Prorock, John

ORIGINAL SHEET - ARCH D

Stantec

Stantec Consulting Services Inc.
4969 Centre Pointe Drive, Suite 200
North Charleston, SC 29418
Tel. 843.740.7700
www.stantec.com

Copyright Reserved

The Contractor shall verify and be responsible for all dimensions. DO NOT scale the drawing - any errors or omissions shall be reported to Stantec without delay.
The Copyrights to all designs and drawings are the property of Stantec. Reproduction or use for any purpose other than that authorized by Stantec is forbidden.

Consultants

Legend

Notes

This drawing is not to be used for construction purposes unless signed and sealed by the Engineer of Record and stamped "Approved For Construction." Use of this drawing for quantity take-offs and pricing is preliminary until all applicable permits have been obtained.

APPROVED FOR CONSTRUCTION

Revision	By	Appd.	YY.MM.DD
4. Revised per SCDOT Comments	JTP	BDK	17.12.04
3. Revised per SCDOT Comments	JTP	BDK	17.08.02
2. Issued for Permit Review	JTP	BDK	17.05.30
1. Issued for Internal Review	JTP	BDK	16.06.01
Issued	By	Appd.	YY.MM.DD

File Name:	Dwn.	Chkd.	Dsgn.	YY.MM.DD

Permit-Seal

12/4/17

Client/Project

Georgetown County

Hagley West Drainage Improvements
Phase 2

Georgetown, SC

Title

UTILITY, ROADWAY & TRAFFIC CONTROL DETAILS

Project No.	Scale
178420615	

Drawing No.	Sheet	Revision
C32	32 of 34	0