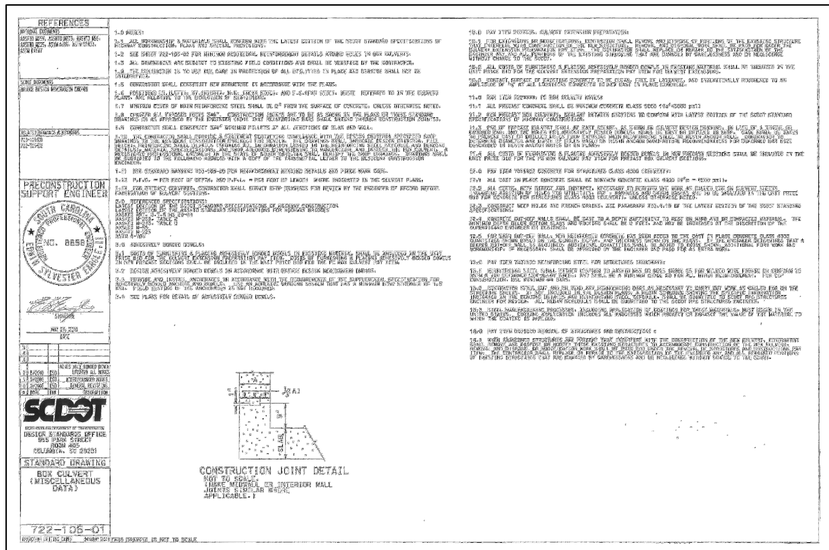

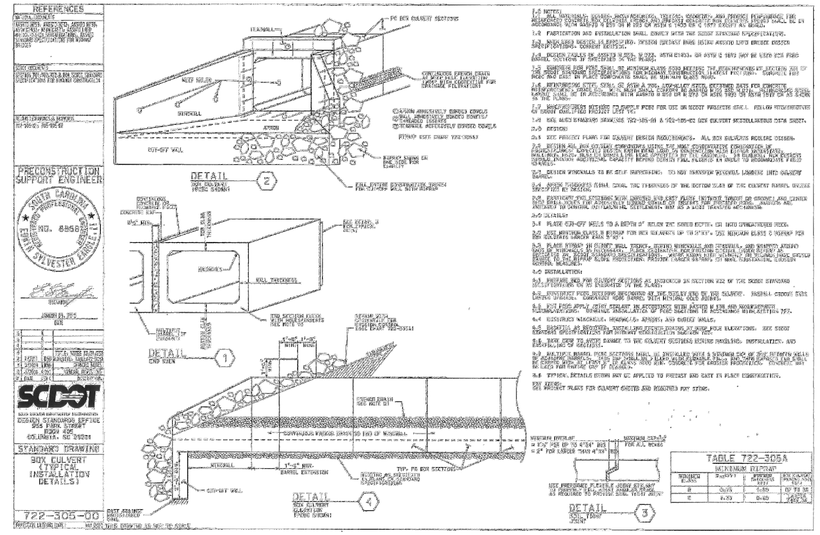

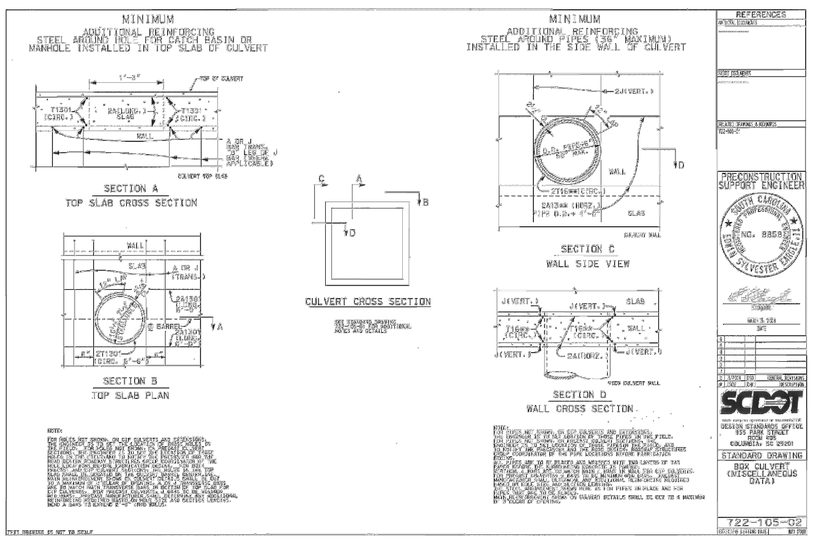

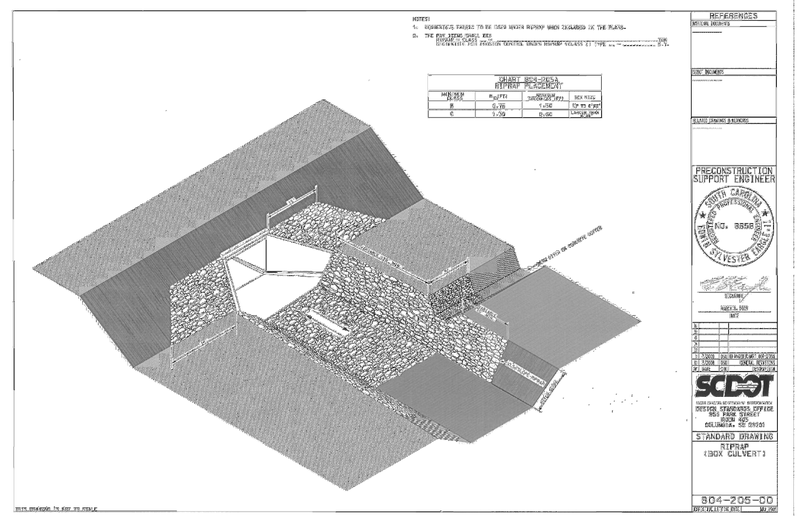

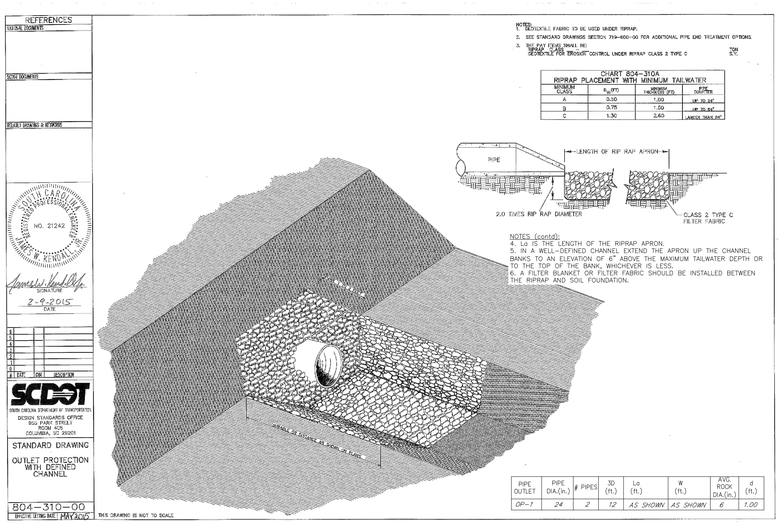

Stantec

Stantec Consulting Services Inc.
4969 Centre Pointe Drive, Suite 200
North Charleston, SC 29418
Tel. 843.740.7700
www.stantec.com

Copyright Reserved

The Contractor shall verify and be responsible for all dimensions. DO NOT scale the drawing - any errors or omissions shall be reported to Stantec without delay.
The Copyrights to all designs and drawings are the property of Stantec. Reproduction or use for any purpose other than that authorized by Stantec is forbidden.

Consultants

Legend

Notes

This drawing is not to be used for construction purposes unless signed and sealed by the Engineer of Record and stamped "Approved For Construction." Use of this drawing for quantity take-offs and pricing is preliminary until all applicable permits have been obtained.

APPROVED FOR CONSTRUCTION

Revision	By	Appd.	YY.MM.DD
4. Revised per SCDOT Comments	JTP	BDK	17.12.04
3. Revised per SCDOT Comments	JTP	BDK	17.08.02
2. Issued for Permit Review	JTP	BDK	17.05.30
1. Issued for Internal Review	JTP	BDK	16.06.01

Issued	By	Appd.	YY.MM.DD

File Name:	Dwn.	Chkd.	Dsgn.	YY.MM.DD

Permit-Seal

SOUTH CAROLINA STANTEC CONSULTING SERVICES, INC. No. C02310 CERTIFICATE OF AUTHORIZATION

SOUTH CAROLINA REGISTERED PROFESSIONAL ENGINEER No. 32297 JOHN T. PRONOVOST
12/4/17

Client/Project

Georgetown County

Hagley West Drainage Improvements Phase 2

Georgetown, SC

Title

DRAINAGE & EROSION CONTROL DETAILS

Project No.	Scale	
178420615		
Drawing No.	**Sheet**	**Revision**
C30	30 of 34	0

811 Know what's **below.** **Call** before you dig.

V:\1784\active\178420615\Hudson Land\Drawings\Sheets\revised phase_2\20615-details_p2.dwg
2017/12/04 10:02 AM By: Pronovost, John

ORIGINAL SHEET - ARCH D