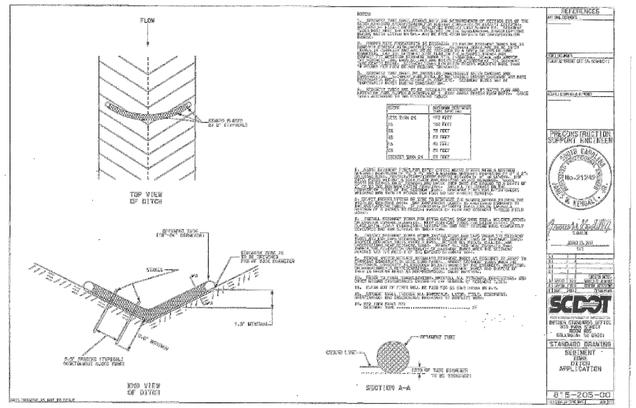

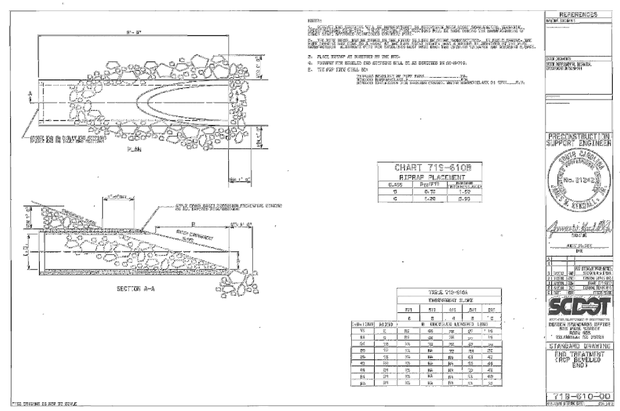

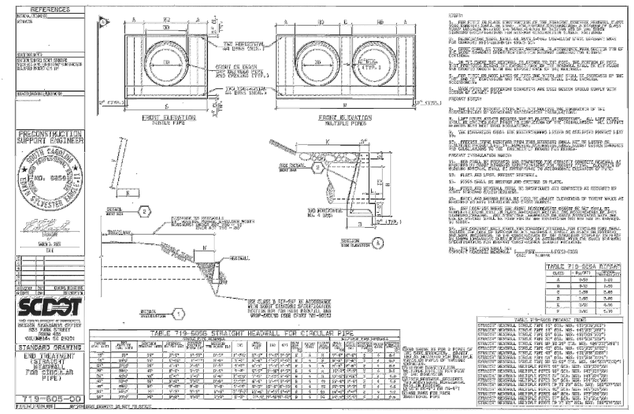

SEQUENCE OF CONSTRUCTION:

1. RECEIVE NPDES COVERAGE FROM DHEC.
2. PRE-CONSTRUCTION MEETING.
3. NOTIFY DHEC EQC REGIONAL OFFICE 48 HOURS PRIOR TO BEGINNING LAND-DISTURBING ACTIVITIES.
4. INSTALLATION OF SEDIMENT TUBES AT ALL OUTFALL LOCATIONS.
5. ROUGH GRADE DITCH AREAS AS SHOWN ON PLANS. INSTALL SEDIMENT TUBES IN DITCH SECTIONS AS SHOWN ON PLANS.
6. CLEAR PROJECT TO LIMITS AS SHOWN.
7. INSTALLATION OF NEW STORMWATER PIPES AS OLD ONES ARE REMOVED TO ALLOW FOR CONTINUED CONVEYANCE OF STORMWATER THROUGHOUT CONSTRUCTION.
8. CONSTRUCT DIVERSION SWALES AS NECESSARY TO CONVEY THE STORM WATER BEFORE THE PROPOSED STORM DRAINAGE SYSTEM IS FULLY FUNCTIONAL, INSTALLING ADDITIONAL SEDIMENT TUBES IF NECESSARY.
9. INSTALL PERIMETER SILT FENCE WHERE SEDIMENT IS OBSERVED TO BE LEAVING CONSTRUCTION AREAS. MAINTAIN PERIMETER SILT FENCE, DIVERSIONS, AND SEDIMENT TUBES.
10. DITCH GRADING, INSTALL PAVEMENT. PERMANENT/FINAL STABILIZATION OF DITCHES WITH SEEDING AND EROSION CONTROL BLANKET.
11. MAINTENANCE OF SEDIMENT AND EROSION CONTROL MEASURES MUST CONTINUE UNTIL THE SITE IS PERMANENTLY STABILIZED AND THE CONTROLS ARE REMOVED.
12. ACHIEVE FINISHED GRADE IN DITCHES PER PLANS, PROFILES, AND DETAILS.
13. CONTACT GEORGETOWN COUNTY FOR FINAL INSPECTION AND CLOSE-OUT OF PROJECT. AS-BUILT, VIDEO AND CLOSE-OUT APPLICATION TO BE SUBMITTED FOR REVIEW AND APPROVAL AS REQUIRED BY GEORGETOWN COUNTY.
14. REMOVAL OF TEMPORARY SEDIMENT AND EROSION CONTROL MEASURES AFTER ENTIRE WORK AREA IS FINALLY STABILIZED (THE DEPARTMENT RECOMMENDS THAT THE PROJECT OWNER/OPERATOR HAVE THE SWPPP PREPARER OR REGISTRATION EQUIVALENT APPROVE THE REMOVAL OF TEMPORARY STRUCTURES).
15. SUBMIT TO DHEC FOR N.O.T. WITHIN 30 DAYS OF FINAL STABILIZATION.

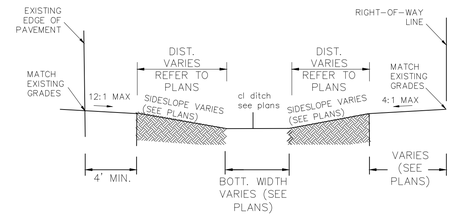

NOTE: NORTH AMERICAN GREEN SC150 LINER SHALL BE INSTALLED IN ALL DITCH AND SWALE SECTIONS (SEE DETAILS THIS SHEET).

GRASSED TRAPEZOIDAL DITCH DETAIL
N.T.S.

ROLLMAX™ ROLLED EROSION CONTROL

Specification Sheet – EroNet™ SC150® Erosion Control Blanket

DESCRIPTION

The extended-term double net erosion control blanket shall be a machine-produced mat of 70% agricultural straw and 30% coconut fiber with a functional longevity of up to 24 months. (NOTE: functional longevity may vary depending upon climatic conditions, soil, geographical location, and elevation). The blanket shall be of consistent thickness with the straw and coconut evenly distributed over the entire area of the mat. The blanket shall be covered on the top side with a heavyweight photodegradable polypropylene netting having ultraviolet additives to delay breakdown and an approximate 0.53 x 0.63 in (1.59 x 1.59 cm) mesh, and on the bottom side with a lightweight photodegradable polypropylene netting with an approximate 0.50 x 0.50 (1.27 x 1.27 cm) mesh. The blanket shall be sewn together on 1.50 inch (3.81 cm) centers with degradable thread. The blanket shall be manufactured with a colored thread stitched along both outer edges (approximately 2-5 inches [5-12.5 cm] from the edge) as an overlap guide for adjacent mats.

The SC150 shall meet Type 3.B specification requirements established by the Erosion Control Technology Council (ECTC) and Federal Highway Administration's (FHWA) FP-03 Section 713.17

Material Content		
Matrix	70% Straw Fiber 30% Coconut Fiber	0.35 lbs/sq yd (0.19 kg/sm) 0.15 lbs/sq yd (0.08 kg/sm)
Netting	Top: Heavyweight photodegradable with UV additives	3 lbs/1000 sq ft (1.47 kg/100 sm)
	Bottom: lighweight photodegradable	1.5 lb/1000 sq ft (0.73 kg/100 sm)
Thread	Degradable	

Standard Roll Sizes			
Width	6.67 ft (2.03 m)	8 ft (2.4 m)	16.0 ft (4.87 m)
Length	108 ft (32.92 m)	112 ft (34.14 m)	108 ft (32.92 m)
Weight ± 10%	44 lbs (19.95 kg)	55 lbs (24.95 kg)	105.6 lbs (47.5 kg)
Area	80 sq yd (66.9 sm)	100 sq yd (83.61 sm)	192 sq yd (165.6 sm)

Index Property	Test Method	Typical
Thickness	ASTM D6525	0.35 in. (8.89 mm)
Resiliency	ECTC Guidelines	75%
Water Absorbency	ASTM D1117	342%
Mass/Unit Area	ASTM D6475	7.87 oz/sy (267.6 g/sm)
Swell	ECTC Guidelines	30%
Smolder Resistance	ECTC Guidelines	Yes
Stiffness	ASTM D1388	1.11 oz-in
Light Penetration	ASTM D6567	6.2%
Tensile Strength - MD	ASTM D6818	362.4 lbs/ft (5.37 kN/m)
Elongation - MD	ASTM D6818	29.4%
Tensile Strength - TD	ASTM D6818	136.8 lbs/ft (2.03 kN/m)
Elongation - TD	ASTM D6818	27.6%
Biomass Improvement	ASTM D7322	481%

Design Permissible Shear Stress	
Unvegetated Shear Stress	2.00 psf (96 Pa)
Unvegetated Velocity	8.0 fps (2.44 m/s)

Slope Design Data: C Factors			
	Slope Gradients (S)		
Slope Length (L)	≤ 3:1	3:1 – 2:1	≥ 2:1
≤ 20 ft (6 m)	0.001	0.048	0.100
20-50 ft	0.051	0.079	0.145
≥ 50 ft (15.2 m)	0.10	0.110	0.190

NTPEP Large-Scale Slope
ASTM D6459 - C-factor = 0.031

Roughness Coefficients – Unveg.	
Flow Depth	Manning's n
≤ 0.50 ft (0.15 m)	0.050
0.50 – 2.0 ft	0.050-0.018
≥ 2.0 ft (0.60 m)	0.018

Tensar. NORTH AMERICAN GREEN®

Tensar International Corporation
2500 Northwinds Parkway
Suite 500
Alpharetta, GA 30009
800: TENSAR-1
tensarcorp.com

Tensar International Corporation warrants that at the time of delivery the product furnished hereunder shall conform to the specification stated herein. Any other warranty including merchantability and fitness for a particular purpose, are hereby excluded. If the product does not meet specifications on this page and Tensar is notified prior to installation, Tensar will replace the product at no cost to the customer. **This product specification supersedes all prior specifications for the product described above and is not applicable to any products shipped prior to January 1, 2012.**

©2010, Tensar International Corporation

EC_RMX_MPDS_ESC150_6.13

EROSION CONTROL MATTING / LINER DETAILS
N.T.S.

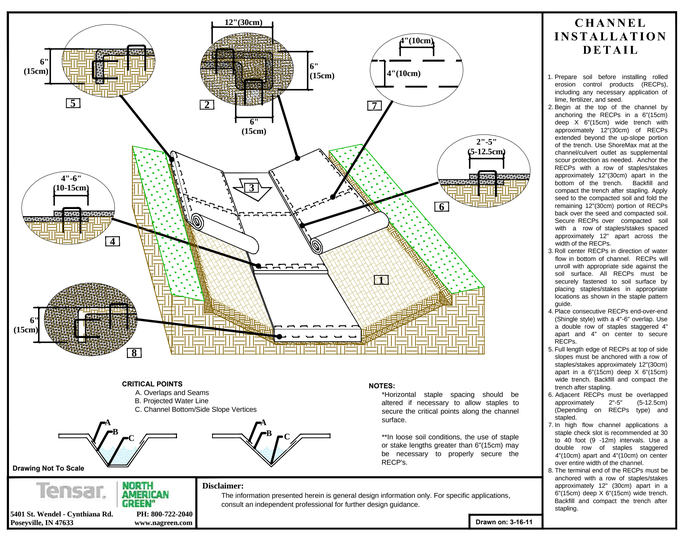

CHANNEL INSTALLATION DETAIL

1. Prepare soil before installing rolled erosion control products (RECPs), including any necessary application of lime, fertilizer, and seed.
2. Begin at the top of the channel by anchoring the RECPs in a 6"(15cm) deep X 6"(15cm) wide trench with approximately 12"(30cm) of RECPs extended beyond the up-slope portion of the trench. Use ShoreMax mat at the channel/culvert outlet as supplemental scour protection as needed. Anchor the RECPs with a row of staples/stakes approximately 12"(30cm) apart in the bottom of the trench. Backfill and compact the trench after stapling. Apply seed to the compacted soil and fold the remaining 12"(30cm) portion of RECPs back over the seed and compacted soil. Secure RECPs over compacted soil with a row of staples/stakes spaced approximately 12" apart across the width of the RECPs.
3. Roll center RECPs in direction of water flow in bottom of channel. RECPs will unroll with appropriate side against the soil surface. All RECPs must be securely fastened to soil surface by placing staples/stakes in appropriate locations as shown in the staple pattern guide.
4. Place consecutive RECPs end-over-end (Shingle style) with a 4"-6" overlap. Use a double row of staples staggered 4" apart and 4" on center to secure RECPs.
5. Full length edge of RECPs at top of side slopes must be anchored with a row of staples/stakes approximately 12"(30cm) apart in a 6"(15cm) deep X 6"(15cm) wide trench. Backfill and compact the trench after stapling.
6. Adjacent RECPs must be overlapped approximately 2"-5" (5-12.5cm) (Depending on RECPs type) and stapled.
7. In high flow channel applications a staple check slot is recommended at 30 to 40 foot (9 -12m) intervals. Use a double row of staples staggered 4"(10cm) apart and 4"(10cm) on center over entire width of the channel.
8. The terminal end of the RECPs must be anchored with a row of staples/stakes approximately 12" (30cm) apart in a 6"(15cm) deep X 6"(15cm) wide trench. Backfill and compact the trench after stapling.

NOTES:
*Horizontal staple spacing should be altered if necessary to allow staples to secure the critical points along the channel surface.

**In loose soil conditions, the use of staple or stake lengths greater than 6"(15cm) may be necessary to properly secure the RECP's.

Tensar. NORTH AMERICAN GREEN®
5401 St. Wendel - Cynthiana Rd. Poseyville, IN 47633
PH: 800-722-2040 www.nagreen.com

Disclaimer:
The information presented herein is general design information only. For specific applications, consult an independent professional for further design guidance.

Drawn on: 3-16-11

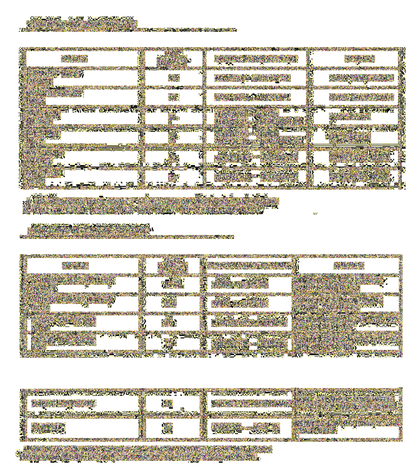

LIKELY SITE CONDITIONS MAY REQUIRE HEAVIER SEEDING RATES.
SEEDING DATES MAY NEED TO BE ALTERED TO FIT TEMPERATURE VARIATIONS AND LOCAL CONDITIONS.
ALL DISTURBED AREAS MUST BE GRASSED IN ACCORDANCE WITH S.C.D.O.T. STANDARD SPECS. PRIOR TO ACCEPTANCE BY GEORGETOWN COUNTY.

SEEDING SCHEDULE

811 Know what's below. Call before you dig.

Stantec
Stantec Consulting Services Inc.
4969 Centre Pointe Drive, Suite 200
North Charleston, SC 29418
Tel. 843.740.7700
www.stantec.com

Copyright Reserved
The Contractor shall verify and be responsible for all dimensions. DO NOT scale the drawing - any errors or omissions shall be reported to Stantec without delay.
The Copyrights to all designs and drawings are the property of Stantec. Reproduction or use for any purpose other than that authorized by Stantec is forbidden.

Consultants

Legend

Notes

This drawing is not to be used for construction purposes unless signed and sealed by the Engineer of Record and stamped "Approved For Construction." Use of this drawing for quantity take-offs and pricing is preliminary until all applicable permits have been obtained.

APPROVED FOR CONSTRUCTION

Revision	By	Appd.	YY.MM.DD
4. Revised per SCDOT Comments	JTP	BDK	17.12.04
3. Revised per SCDOT Comments	JTP	BDK	17.08.02
2. Issued for Permit Review	JTP	BDK	17.05.30
1. Issued for Internal Review	JTP	BDK	16.06.01

Issued	By	Appd.	YY.MM.DD

File Name:

Dwn.	Chkd.	Dsgn.	YY.MM.DD

Permit-Seal

SOUTH CAROLINA STANTEC CONSULTING SERVICES, INC. No. C02310 CERTIFICATE OF AUTHORIZATION

SOUTH CAROLINA PROFESSIONAL ENGINEER No. 32297 JOHN T. PROROCK 12/4/17

Client/Project
Georgetown County

Hagley West Drainage Improvements Phase 2
Georgetown, SC

Title
DRAINAGE & EROSION CONTROL DETAILS

Project No.	Scale
178420615	NTS

Drawing No.	Sheet	Revision
C27	27 of 34	0

V:\1784\active\178420615\urban_land\Drawings\Sheets\revised phase_2\20615-details_p2.dwg
2017/12/04 10:02 AM By: Prorock, John

ORIGINAL SHEET - ARCH D