CORTEZ SECTIONAL

NOTES

1. BUILDING IS DESIGNED TO COMPLY TO WITH THE 2015 INTERNATIONAL BUILDING CODE (IBC).
2. DESIGN COMPLIES WITH THE PROVISIONS OF THE 2015 IBC FOR THE FOLLOWING LOADS:
   GROUND SNOW LOAD = 210 PSF
   FLOOR LOAD = 400 PSF
   IBC DESIGN SPECTRAL RESPONSE S_S = 1.669, S_1 = 0.748
   SITE CLASS D
   SEISMIC USE GROUP: II
   SEISMIC DESIGN CATEGORY: D
   BEARING WALL SYSTEM R = 4.0
   A-5 INTERMEDIATE PRECAST SHEARWALLS
   BASIC WIND SPEED = 150 MPH (3-SECOND GUST),
   WIND EXPOSURE C, I = 1.0
3. CONSTRUCTION TYPE TYPE: V-B
   OCCUPANCY: B
   EXTERIOR WALLS: 1-HR RATED PER IBC TABLE 721.1(2), ITEM 4-1.1
   UNLIMITED UNPROTECTED OPENINGS IN ACCORDANCE WITH IBC 705.8.1 EXCEPTION 2 AND TABLES 601 & 602
   MINIMUM FIRE SEPARATION DISTANCE: 10 FEET
4. CONCRETE STRENGTH f'ci = 2500 PSI INITIAL f'c = 5000 PSI
   FINAL AIR ENTRAINMENT 6% ± 1 1/2% IN PLASTIC CONCRETE.
   REINFORCING STEEL: GRADE 60, Fy = 60 KSI
   MINIMUM LAP 18" AT SPLICES. TIE BARS WITH DOUBLE ANNEALED 16 GA IRON WIRE. REINFORCING TO BE PLACED IN CENTER OF PANEL UNO. REINFORCING STEEL SHALL BE ACCURATELY PLACED, ADEQUATELY SUPPORTED AND SECURED AGAINST DISPLACEMENT BEFORE CONCRETE IS PLACED AND SHALL ALSO MET THE STANDARDS SET FORTH IN ACI 318.
   WELDED WIRE FABRIC (W.W.F.): 4x4xW8xW8, Fy=65 KSI (OR EQUIVAL). COMPLY WITH ASTM A82, SMOOTH WIRE, MIN. LAP 2 SQUARES.
5. EMBEDDED ITEMS IDENTIFIED ON DRAWINGS(i.e. PS-2, R301) REFER TO CXT STANDARD EMBEDMENT CATALOG.
6. BACK OF PANELS TO HAVE SMOOTH TROWEL FINISH U.N.O. ALL SURFACES TO BE TEXTURED ARE NOTED ON PANEL DWG'S
7. REFER TO SEPARATE CXT INCORPORATED SPECIFICATIONS COVERING DESIGN, MATERIALS, PRODUCTION, AND INSTALLATION CRITERIA FOR SPECIFIC STYLE OF BUILDING.
8. ALL REBAR BENDS TO HAVE A MINIMUM RADIUS OF 6x THE BAR DIAMETER.
9. INSTALLATION TO MEET APPLICABLE LOCAL, STATE & FEDERAL CODES, BY OTHERS.
10. ADEQUATE PLUMBING FACILITIES MUST BE PROVIDED IN ACCORDANCE WITH 2015 IBC 2902.3.2 (NOT BY CXT).
11. BUILDING DOES NOT CONTAIN CONDITIONED SPACE. NO ENVELOPE REQUIREMENTS.

Rigging, Lifting, storage and transportation requirements of modular buildings are not reviewed or approved by L&I FAS.

CASTING TOLERANCES

OVERALL LENGTH OR WIDTH
10 FT OR UNDER = +1 1/8", -1/4"
10 TO 20 FT = +1/8", -3/16"
20 TO 40 FT = +1/4"

TOTAL THICKNESS = -1/8, +1/4
VARIATION FROM SQUARE = 1/8 PER 6 FT OF DIAGONAL
LOCAL SMOOTHNESS = 1/4" IN 10 FT
SWEEP = +1/4"
POSITION OF TENDONS = ±1/4"
POSITION OF BLOCKOUTS = ±1/4"
SIZE OF BLOCKOUT = +1/4"
POSITION OF DOWELS = ±1/4"
TOPPING AND FLUSHNESS OF PLATES = +1/16, -1/4
BOWING = LENGTH/360
END SQUARENESS = +1/8"

WASHINGTON STATE TAC APPROVAL & P.E. DRAWINGS REQUIRED

WALL TEXTURE: EXPOSED AGGREGATE
WALL PAINT: GRANITE ROCK

ROOF TEXTURE: RIBBED METAL
ROOF COLOR: CHARCOAL GREY

TRIM PAINT: BLACK

PANEL MARK NO. KEY PLAN

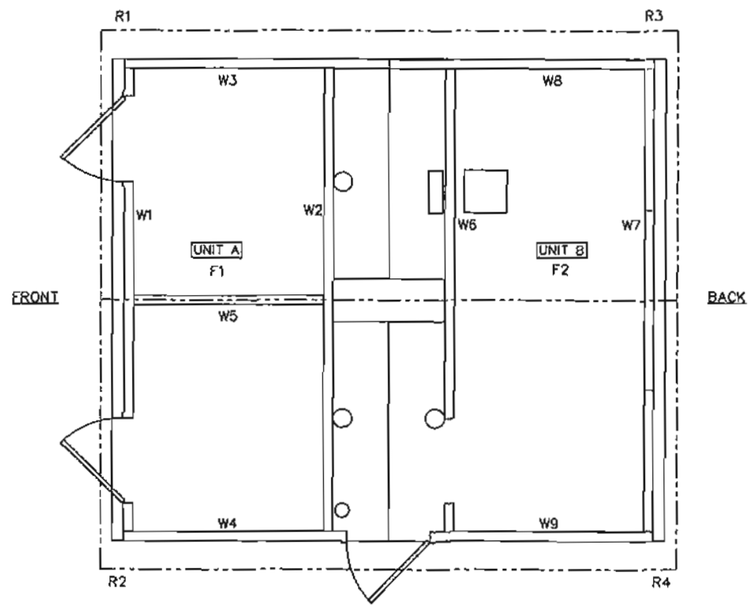

APPLICABLE CODES

2015 INTERNATIONAL BUILDING CODE WITH STATEWIDE AMENDMENTS
ICC/ANSI A117.1-09 ACCESSIBLE AND USABLE BUILDINGS AND FACILITIES, WITH STATEWIDE AMENDMENTS
2015 UNIFORM PLUMBING CODE WITH STATEWIDE AMENDMENTS
2015 INTERNATIONAL MECHANICAL CODE WITH STATEWIDE AMENDMENTS
2017 NATIONAL ELECTRICAL CODE (NEC)
2015 INTERNATIONAL ENERGY CONSERVATION CODE / WASHINGTON STATE ENERGY CODE

SPECIAL CONDITIONS AND/OR LIMITATIONS

ACCESSIBILITY TO THIS BUILDING, INCLUDING PARKING IS TO BE PROVIDED BY OTHERS AND CONSTRUCTED IN ACCORDANCE WITH THE LOCAL BUILDING CODES.

Accessibility and signage shall comply with ANSI A117.1

2009 ANSI A117.1, Section 606.6. Exposed pipes and surfaces. Water supply and drainpipes under lavatories and sinks shall be insulated or otherwise configured to protect against contact. There shall be no sharp or abrasive surfaces under lavatories and sinks.

Foundation plans and details are not reviewed by L&I, except for the reasonability of the design to support the modular building. Approval and inspection of the foundation system is the jurisdiction of the local building official. **This is typical for all foundation related sheets, details and engineering contained within this plan set.**

Onsite use and location of the modular building is the jurisdiction of the local building official. Site, grade and plot drainage plans are not reviewed by LNI.

INDEX OF DRAWINGS

NO.	TITLE
CRS-01	COVER SHEET
CRS-02	HANDLING INSTRUCTIONS
CRS-03	FLOOR PLAN
CRS-04	BUILDING ELEVATIONS
CRS-05	INTERIOR ELEVATIONS
CRS-06	DETAILS
CRS-07	WALL PANEL W1
CRS-08	WALL PANEL W2
CRS-09	WALL PANEL W3
CRS-10	WALL PANEL W4
CRS-11	WALL PANEL W5
CRS-12	WALL PANEL W6
CRS-13	WALL PANEL W7
CRS-14	WALL PANEL W8
CRS-15	WALL PANEL W9
CRS-16	FLOOR SLAB F1
CRS-17	FLOOR SLAB F2
CRS-18	ROOF SLAB R1
CRS-19	ROOF SLAB R2
CRS-20	ROOF SLAB R3
CRS-21	ROOF SLAB R4
CRS-22	FOUNDATION DETAIL
CRS-23	FLOOR DRAIN LOCATIONS & BELOW FLOOR PIPING
CRS-24	WATER, WASTE & VENT PIPING PLANS & NOTES
CRS-25	PLUMBING SCHEDULE, DIAGRAMS & NOTES
CRS-26	ELECTRICAL NOTES & SCHEDULES
CRS-27	ELECTRICAL PLAN, LEGEND & NOTES
CRS-28	MATERIAL LIST
EM-01	COMPILED EMBEDS
EM-02	COMPILED EMBEDS
EM-03	COMPILED EMBEDS
EM-04	COMPILED EMBEDS
EM-05	COMPILED EMBEDS

STATE OF WASHINGTON
EPARTMENT OF LABOR AND INDUSTRIES
FIELD SERVICES AND PUBLIC SAFETY
FACTORY ASSEMBLED STRUCTURES
PLAN APPROVAL # IS FBS 1700204
SUBJECT TO FIELD INSPECTION OVERSIGHT
OR VIOLATION OF RCW IS NOT INCLUDED
BY LuKS DATE: 9/29/2017
EXPIRATION DATE: 9/29/2018

STATE OF WASHINGTON DEPT. OF LABOR AND INDUSTRIES FAS PLAN REVIEW SECTION APPROVED
SEP 29 2017
SUBJECT TO CODE AND FIELD INSPECTION

HEIDEN, WILLIAM RICHARD II
STATE OF WASHINGTON
39076
REGISTERED PROFESSIONAL ENGINEER
EXPIRES April 23, 2019
September 5, 2017

3808 N. Sullivan Bldg. #7 Spokane, WA 99218
CXT
Precast Products
901 N. Highway 77 Hillsboro, TX 76645

PROJECT TITLE
CORTEZ SECTIONAL
BUILDING NUMBER CRS-039

NOTICE
The information contained herein is proprietary and the exclusive property of CXT Incorporated. The information may only be used by the original recipient for the purpose intended. Reproduction or distribution of this information is strictly prohibited without the prior written consent of CXT Incorporated. By viewing use of this information, CXT Incorporated grants no warranty, express or implied, including a warranty of merchantability or of fitness for a particular purpose.
CXT Incorporated

REV.	DESCRIPTION	APPROVAL	DATE
SCALE	3/16"=1'-0"	DATE	06-03-17
DRAWN	DANA B	FILE NO.	CRS-039
CHECKED	RDW	PLOT	64

COVER SHEET

DWG NO. CRS-01 | SHEET 1 / 28 | REV.

CORTEZ SECTIONAL

RECOMMENDED HANDLING AND INSTALLATION INSTRUCTIONS

NOTES:

1. THE CORTEZ SECTIONAL STYLE BUILDING CONSISTS OF TWO SEPARATE UNITS TO BE PLACED AND JOINED AT THE PROJECT SITE. PROPER SITE PREPARATION AND HANDLING IS ESSENTIAL FOR THE SAFE AND PROPER INSTALLATION OF THE BUILDING.

2. PROVIDE SHALLOW TRENCH WITH ROLLED EDGES ALONG BUILDING JOINT LINES TO PREVENT TRAPPING MATERIAL BETWEEN UNITS BEING DRAWN TOGETHER.

3. PLACE UNITS AS CLOSE TO ONE ANOTHER AS POSSIBLE. SPACE BETWEEN UNITS SHOULD NOT EXCEED 1" AT INITIATION OF POST-TENSIONING. MAXIMUM ALLOWABLE FINISH JOINT SPACE BETWEEN UNITS SHALL BE 1/2".

4. POST-TENSIONING TO DRAW UNITS INTO CONTACT SHALL BE ACCOMPLISHED WITH EQUIPMENT PROVIDED BY CXT BY PROPERLY TRAINED PERSONNEL. INSTRUCTIONS PROVIDED BY CXT SHALL BE CAREFULLY ADHERED TO. ALL NECESSARY SAFETY PRECAUTIONS SHALL BE TAKEN BY INSTALLATION PERSONNEL. STRESS TENDONS TO DRAW UNITS TOGETHER AND TO RETAIN A MINIMUM EFFECTIVE FORCE IN EACH TENDON OF 2 KIPS AFTER ALL LOSSES.

5. AFTER COMPLETION OF BUILDING PLACEMENT, BLOCKOUTS AT POST-TENSIONING ANCHORAGE POINTS SHALL BE FILLED WITH NON-METALLIC, NON-SHRINK GROUT. PROVIDE SMOOTH, NEAT FINISH COMPATIBLE WITH SURROUNDING CONCRETE SURFACES. MATCH CONCRETE COLOR.

6. PROVIDE UTILITY CONNECTIONS (PLUMBING & ELECTRICAL) AS REQUIRED AND/OR AS CALLED FOR ON THE DRAWINGS.

7. FILL FLOOR BLOCKOUTS AFTER COMPLETION OF UTILITY HOOKUPS WITH CONCRETE. SLOPE TO DRAIN.

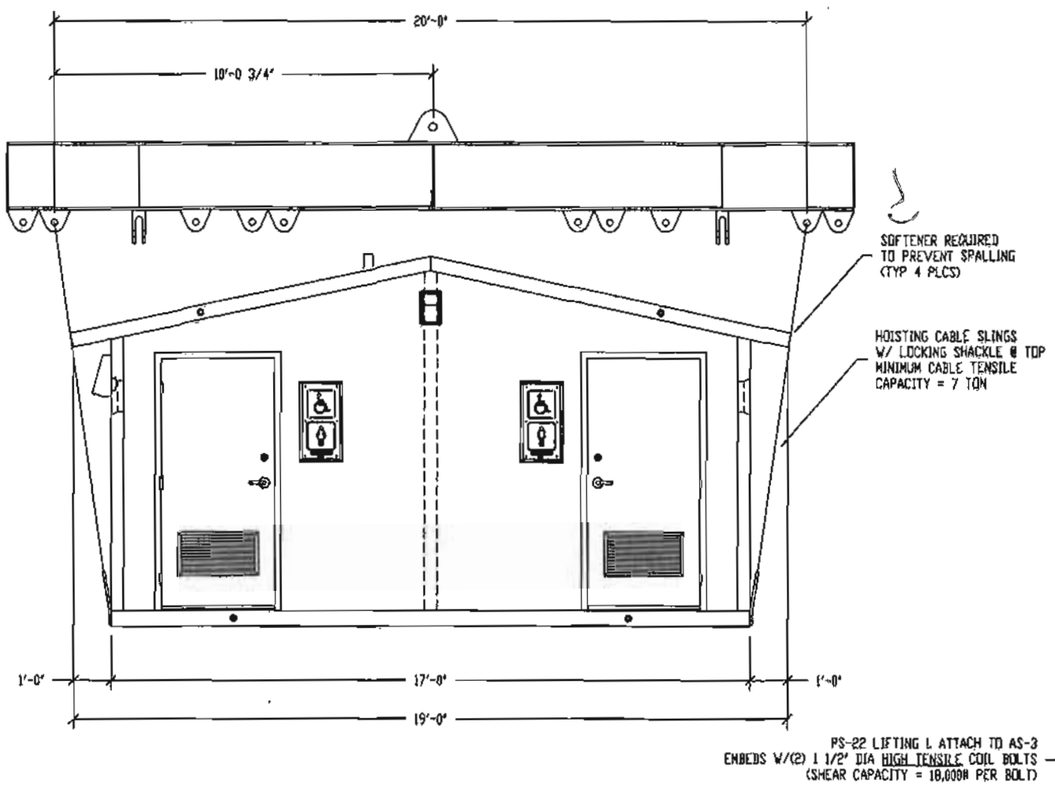

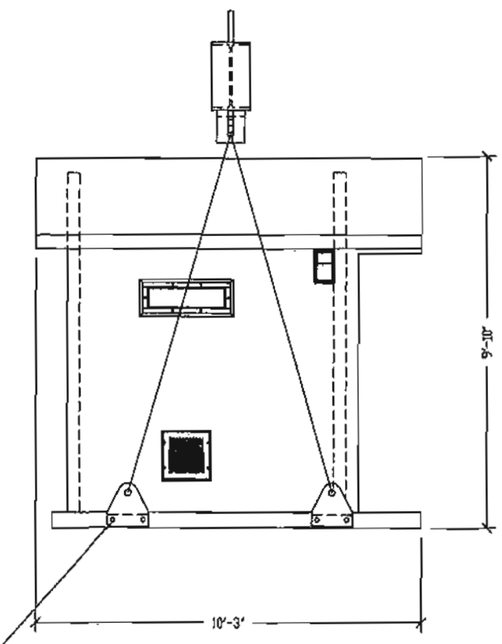

CRANE LIFTING SCHEMATIC - UNITS A & B

SHIPPING WEIGHTS AND DIMENSIONS CRS-039				
SECTION	WEIGHT	LENGTH	WIDTH	HEIGHT
A (LH)	43,240	17'-0"	10'-3"	9'-10"
B (RH)	40,600	17'-0"	10'-3"	9'-10"

EMBEDDED MATERIALS	
ITEM	QTY
P.T. CABLE 26'-0"	4
CHUCKS & WEDGES	8
GROUT (BAGS)	1

CU. FT. CONC.	SQ. FT. W.W.F.
APPROXIMATE WEIGHT	

3808 N. Sullivan Bldg. #7 Spokane, WA 99216

CXT Precast Products

901 N. Highway 77 Hillsboro, TX 76645

PROJECT TITLE
CORTEZ SECTIONAL
BUILDING NUMBER CRS-039

NOTICE

The information contained herein is proprietary and the exclusive property of CXT Incorporated. The information may only be used by the original recipient for the purpose intended. Reproduction or distribution of this information is strictly prohibited without the prior written consent of CXT Incorporated. By viewing use of this information, CXT Incorporated makes no warranty, express or implied, including a warranty of merchantability or of fitness for a particular purpose.

CXT Incorporated

REV.	DESCRIPTION	APPROVED	DATE

SCALE	1/4"=1'-0"	DATE	09-06-17
DRAWN	DANA B	FILE NO.	CRS-039
CHECKED	ROW	PLOT	45

HANDLING INSTRUCTIONS

DWG NO.	SHEET	REV.
CRS-02	2 / 28	

HEIDEN, WILLIAM RICHARD III
STATE OF WASHINGTON
39076
REGISTERED
PROFESSIONAL ENGINEER

EXPIRES April 23, 2019

September 5, 2017

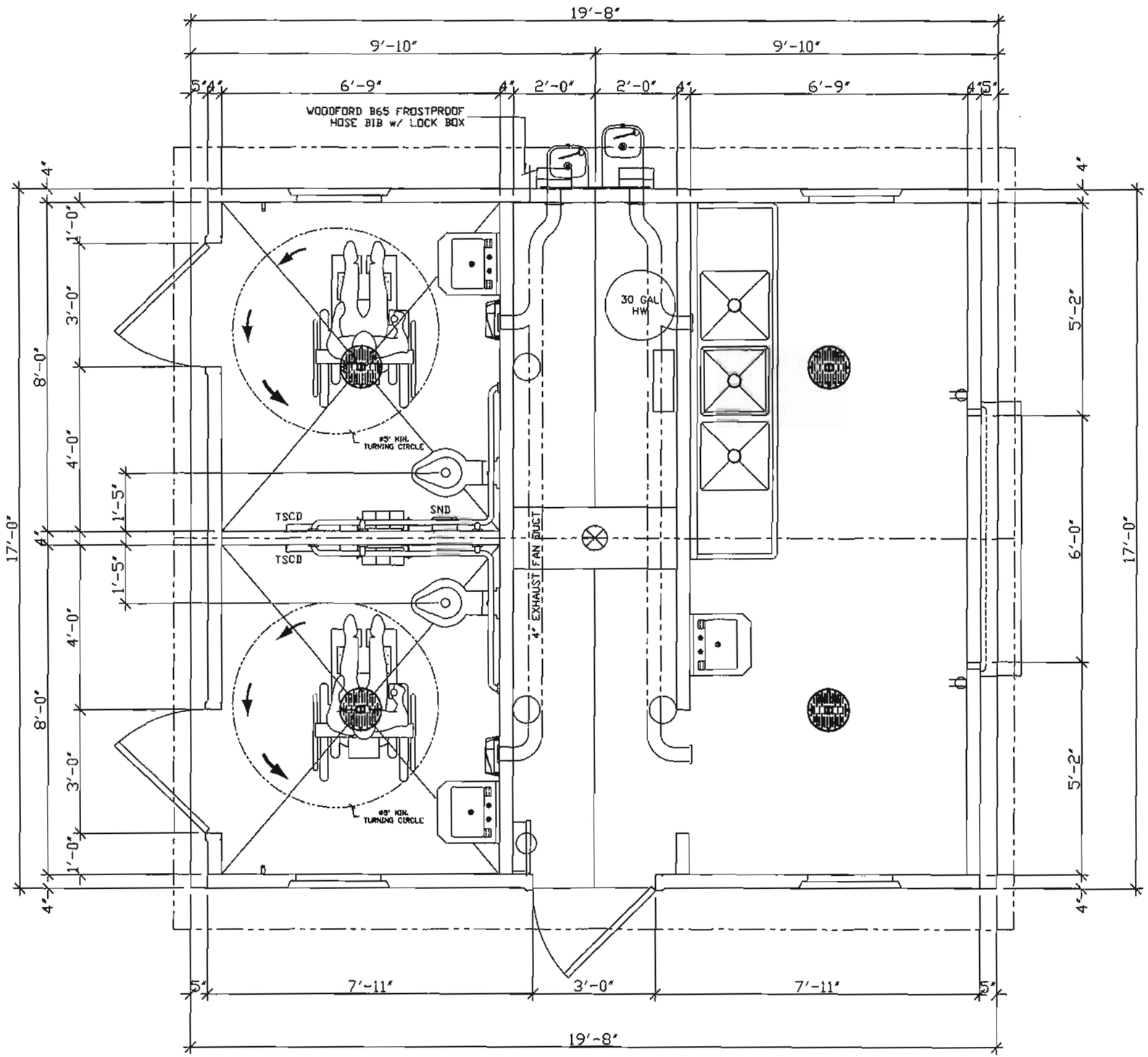

EXPIRES April 23, 2019

September 5, 2017

3808 N. Sullivan Bldg. #7 Spokane, WA 99216

CXT

Precast Products

901 N. Highway 77 Hillsboro, TX 76645

PROJECT TITLE

CORTEZ SECTIONAL

BUILDING NUMBER CRS-039

NOTICE

The information contained herein is proprietary and the exclusive property of CXT Incorporated. The information may only be used by the original recipient for the purpose intended. Reproduction or distribution of this information is strictly prohibited without the prior written consent of CXT Incorporated. By allowing use of this information, CXT Incorporated grants no warranty, express or implied, including of merchantability or of fitness for a particular purpose.

NO.	REVISION	BY	DATE

SCALE	3/8"=1'-0"	DATE	[illegible]
DRAWN	DAN S	FILE NO.	[illegible]
CHECKED	RW	PLOT	

FLOOR PLAN

DWG NO.	SHEET	REV.
CRS-03	3 / 28	

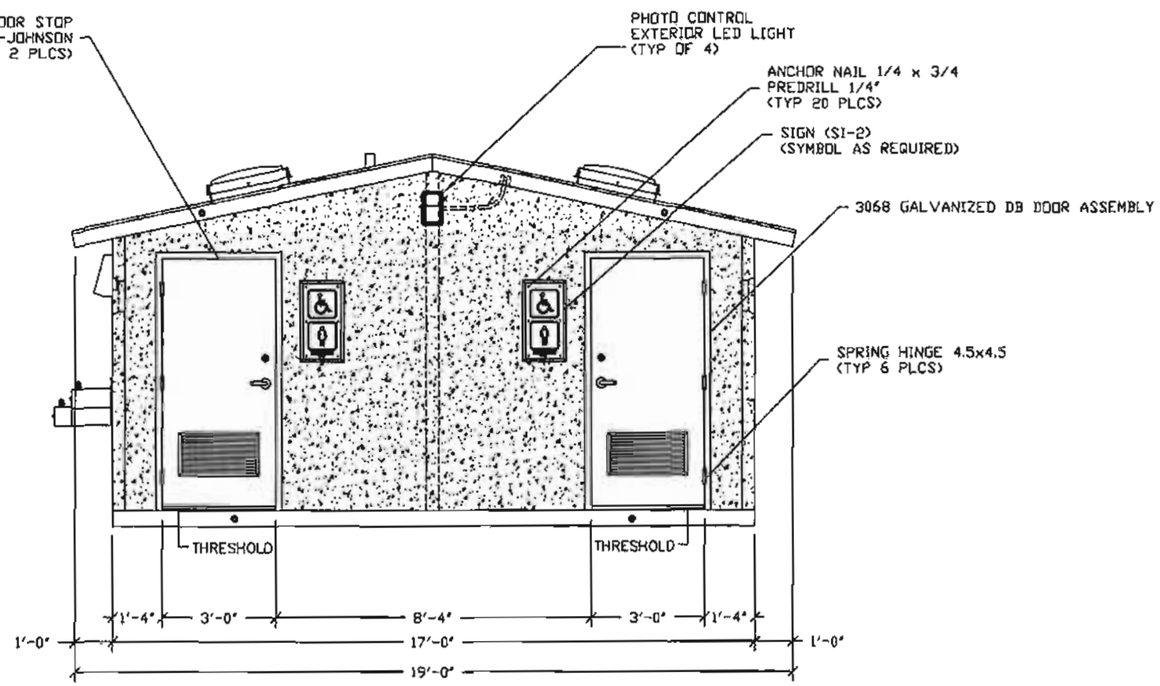

FRONT ELEVATION

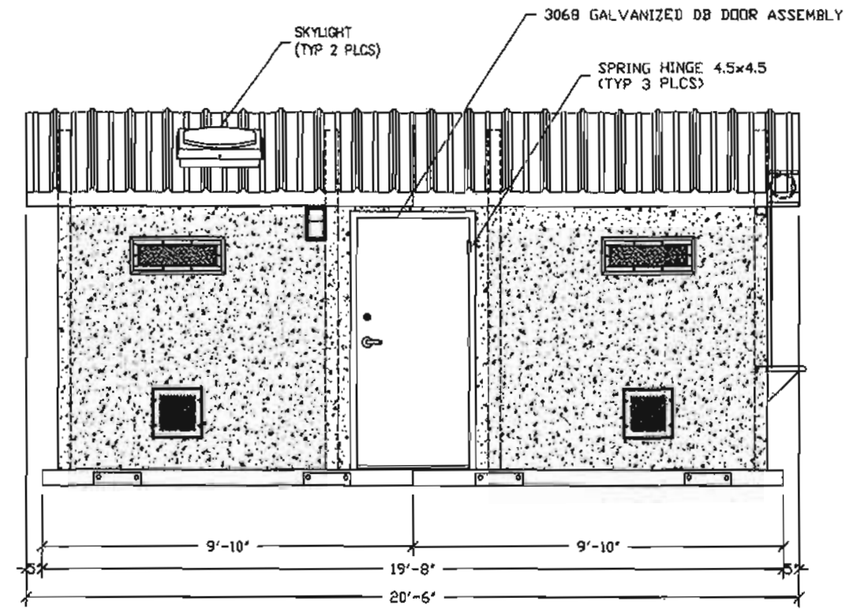

RH SIDE ELEVATION

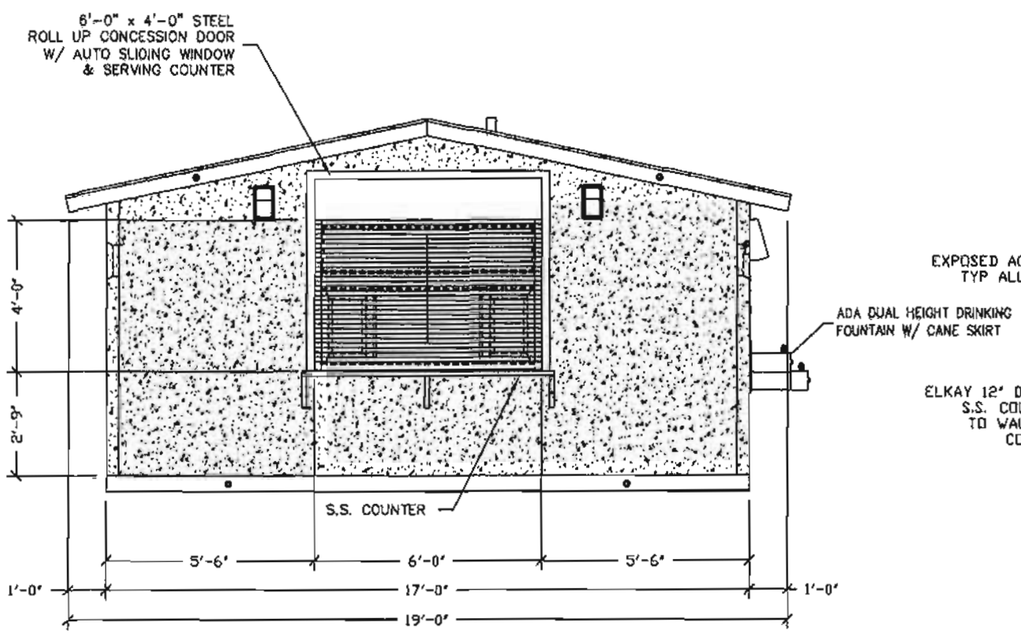

REAR ELEVATION

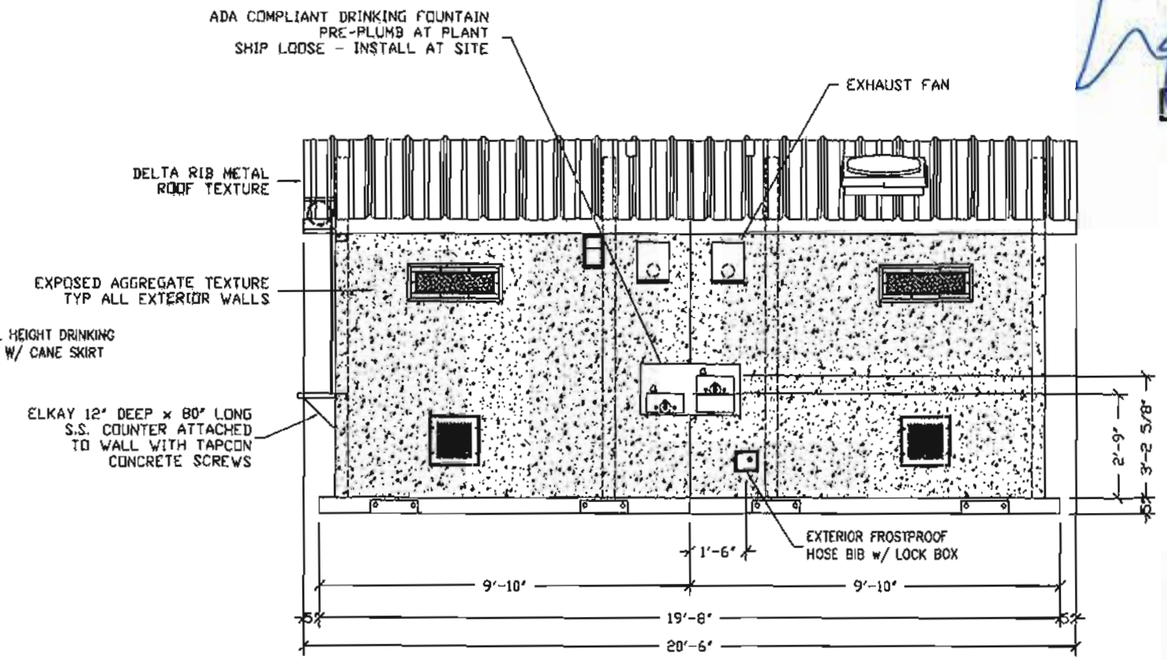

LH SIDE ELEVATION

EMBEDDED MATERIALS

ITEM	QTY
3068 DOOR ASSEMBLY	3
SPRING HINGE 4.5x4.5	9
DRINKING FOUNTAIN W/ CANE SKIRT	1
EXT HOSE BIB	1
SKYLIGHT	2

CU. FT. CONC.	SQ. FT. W.W.F.

HEIDEN, WILLIAM RICHARD III
STATE OF WASHINGTON
39076
REGISTERED
PROFESSIONAL ENGINEER

EXPIRES April 23, 2019

September 5, 2017

3808 N. Sullivan Bldg. #7 Spokane, WA 99216

CXT
Precast Products
901 N. Highway 77 Hillsboro, TX 76645

PROJECT TITLE
CORTEZ SECTIONAL
BUILDING NUMBER CRS-039

NOTICE
The information contained herein is proprietary and the exclusive property of CXT Incorporated. The information may only be used by the original recipient for the purposes intended. Reproduction or distribution of this information is strictly prohibited without the prior written consent of CXT Incorporated. By allowing use of this information, CXT Incorporated grants no warranties, express or implied, including a warranty of merchantability or of fitness for a particular purpose.
CXT Incorporated

SEAL	DESIGNER		APPROVAL	DATE
SCALE	1/4"=1'-0"	DATE		09-05-17
DRAWN	DAMA B	FILE NO.		CRS-039
CHECKED	RW	PLOT		48

BUILDING ELEVATIONS

DWG NO.	SHEET	REV.
CRS-04	4 / 28	

NOTE: BASELINE OF LOWEST TACTILE CHARACTER ON SIGN TO BE 48"-60" AFF

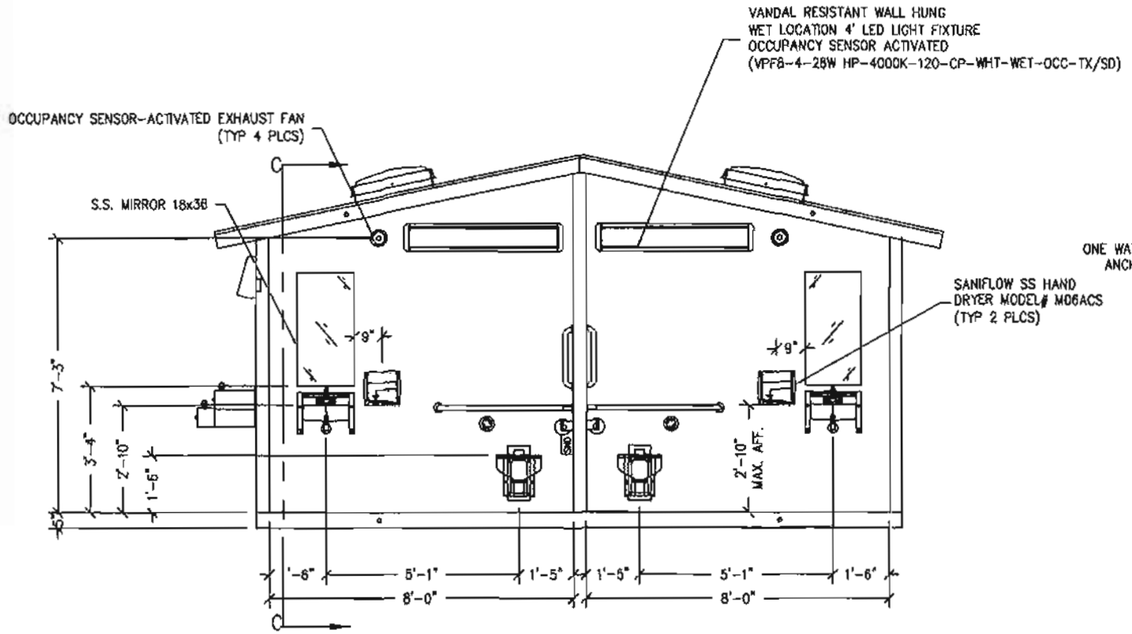

SECTION A – A

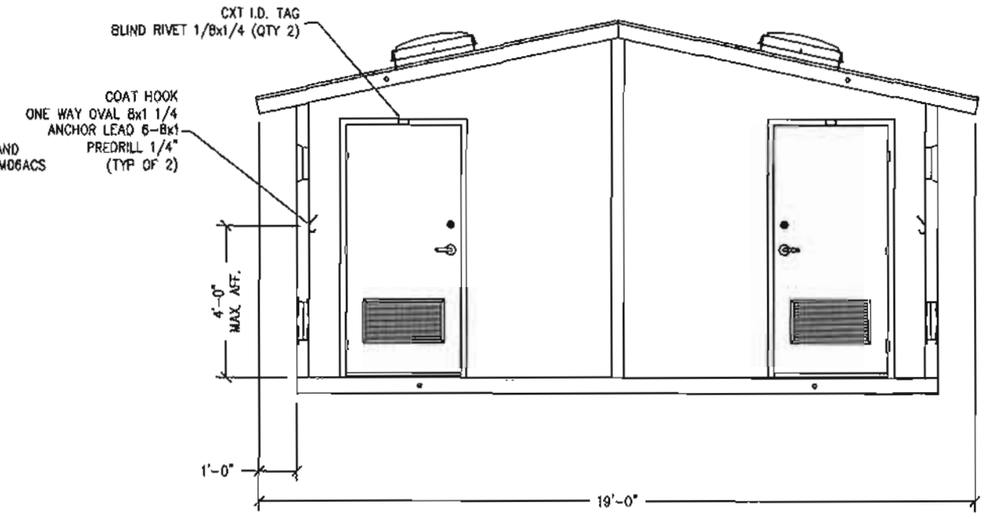

SECTION B – B

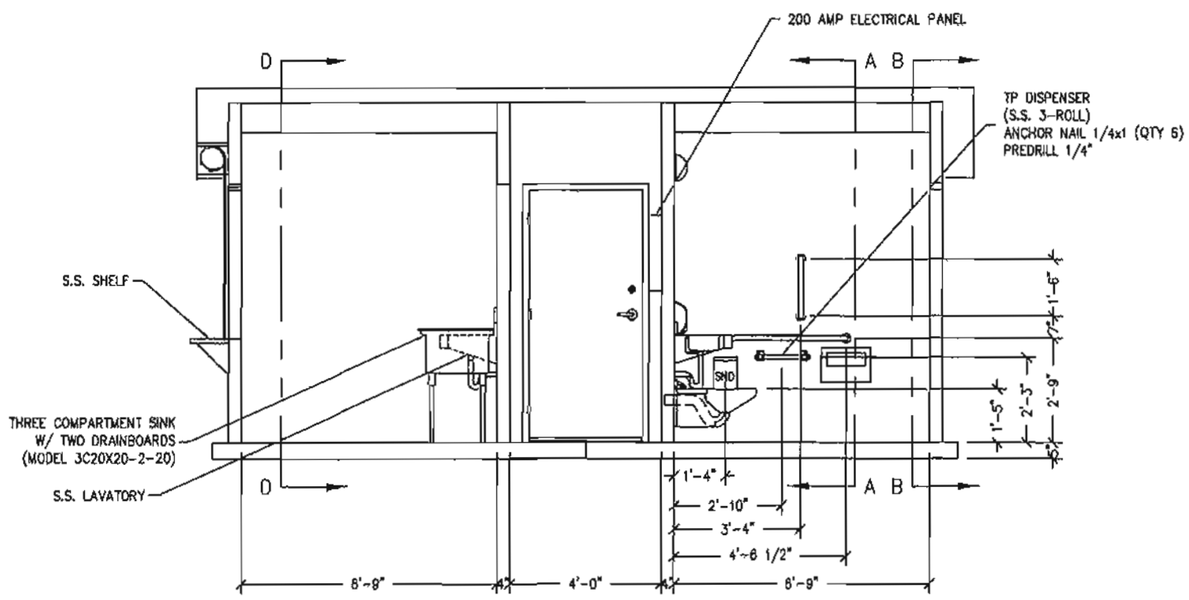

SECTION C – C

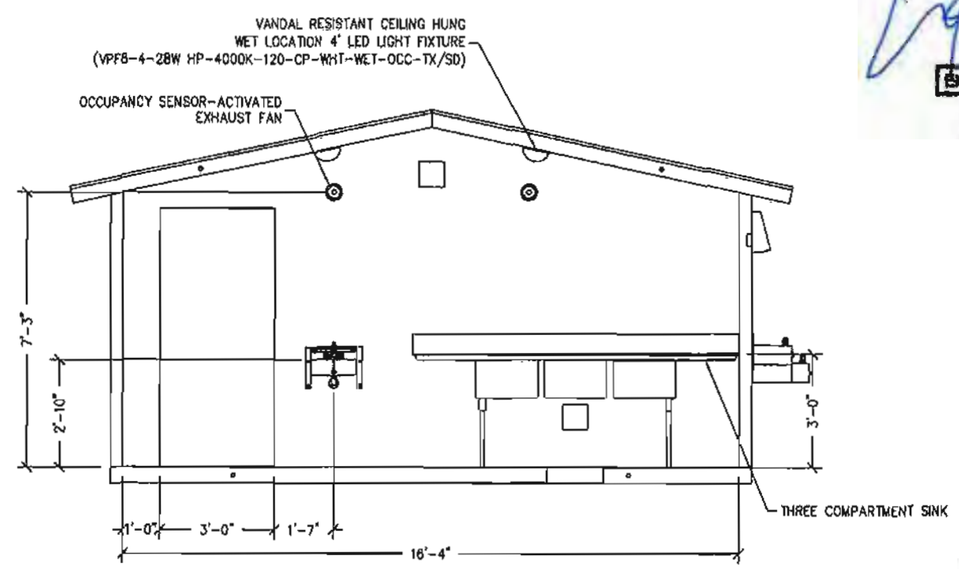

SECTION D – D

EMBEDDED MATERIALS	
ITEM	QTY
BLIND RIVET 1/8x1/4	4
GRAB BAR	3
CXT I.D. TAG	2
S.S. SND	1
TOILET SEAT COVER DISPENSER	2

CU. FT. CONC.	SQ. FT. W.W.F.

HEIDEN, WILLIAM RICHARD III
STATE OF WASHINGTON
39076
REGISTERED PROFESSIONAL ENGINEER

EXPIRES April 23, 2019

September 5, 2017

3808 N. Sullivan Bldg. #7 Spokane, WA 99216

CXT Precast Products

901 N. Highway 77 Hillsboro, TX 76645

PROJECT TITLE
CORTEZ SECTIONAL
BUILDING NUMBER CRS-039

NOTICE

The information contained herein is proprietary and the exclusive property of CXT Incorporated. The information may only be used by the original recipient for the purpose intended. Reproduction or distribution of this information is strictly prohibited without the prior written consent of CXT Incorporated. By allowing use of this information, CXT Incorporated grants no warranty, express or implied, including a warranty of merchantability or fitness for a particular purpose.

CXT Incorporated

NO.	DESCRIPTION	APPROVED	DATE

SCALE	1/4"=1'-0"	DATE	08-03-17
DRAWN	SARA B	FILE NO.	CRS-039
CHECKED	RCW	PLOT	48

BUILDING INTERIOR ELEVATIONS

DWG NO.	SHEET	REV.
CRS-05	5 of 28	

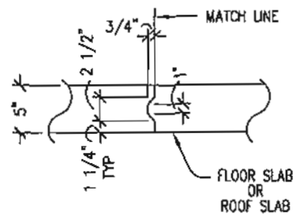

DETAIL A-6
SCALE 3/4" = 1'-0"

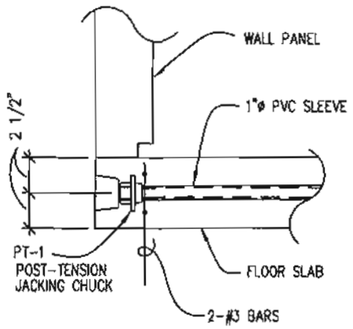

DETAIL B-6
SCALE 1 1/2" = 1'-0"

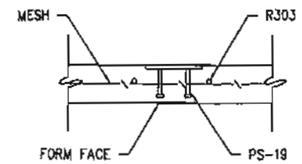

DETAIL C-6
SCALE 3/4" = 1'-0"

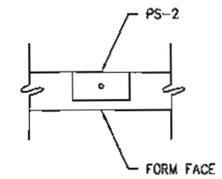

DETAIL D-6
SCALE 3/4" = 1'-0"

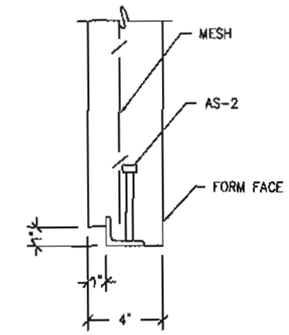

DETAIL E-6
SCALE 1 1/2" = 1'-0"

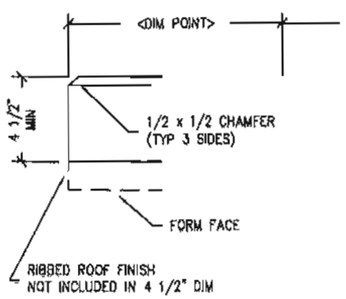

DETAIL F-6
SCALE 1 1/2" = 1'-0"

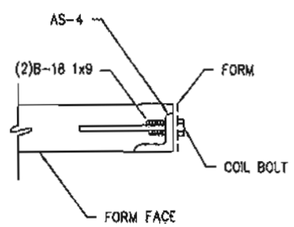

DETAIL G-6
SCALE 3/4" = 1'-0"

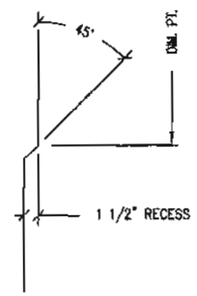

DETAIL H-6
SCALE 1 1/2" = 1'-0"

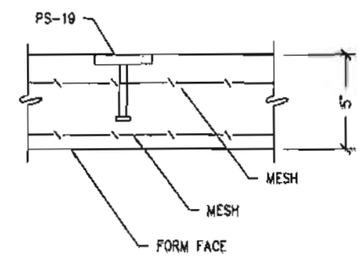

DETAIL I-6
SCALE 1 1/2" = 1'-0"

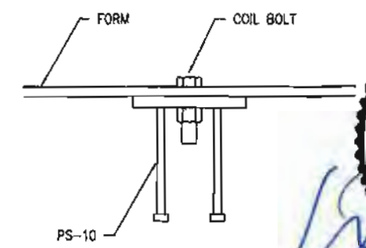

DETAIL K-6
SCALE 1 1/2" = 1'-0"

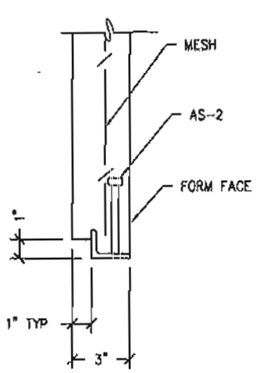

DETAIL L-6
SCALE 1 1/2" = 1'-0"

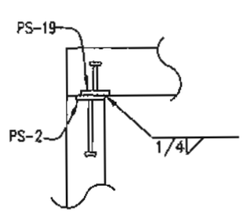

PLAN

TYP. WALL TO WALL PANEL
WELDED CONNECTION

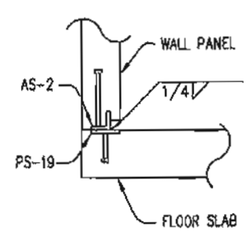

TYP. WALL TO FLOOR SLAB
WELDED CONNECTION

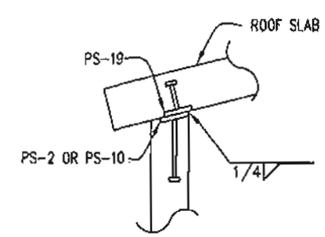

TYP. WALL TO ROOF SLAB
WELDED CONNECTION

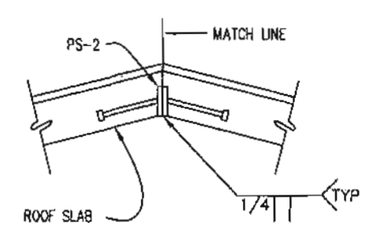

TYP. ROOF TO ROOF SLAB
WELDED CONNECTION

HEIDEN, WILLIAM RICHARD III
STATE OF WASHINGTON
19076
REGISTERED
PROFESSIONAL ENGINEER

EXPIRES April 23, 2019

September 5, 2017

3808 N. Sullivan Bldg. #7 Spokane, WA 99216

CXT

Precast Products

901 N. Highway 77 Hillsboro, TX 76645

PROJECT TITLE

CORTEZ SECTIONAL

BUILDING NUMBER CRS-039

NOTICE

The information contained herein is proprietary and the exclusive property of CXT Incorporated. The information may only be used by the original recipient for the purpose intended. Reproduction or distribution of this information is strictly prohibited without the prior written consent of CXT Incorporated. By allowing use of this information, CXT Incorporated grants no warranty, express or implied, including a warranty of merchantability or of fitness for a particular purpose.

CXT Incorporated

NO.	DESCRIPTION	REVISION	DATE

SCALE	3/4"=1'-0"	DATE	08-24-17
DRAWN	DANA B	FILE NO.	CRS-039
CHECKED	RDW	PLOT	16

CASTING DETAILS

DWG NO. CRS-06

SHEET 6 / 28

REV.

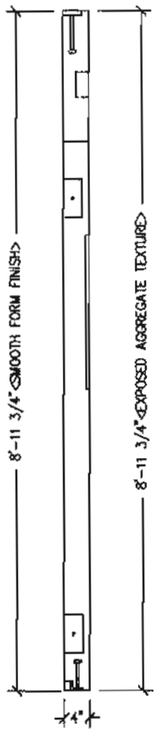

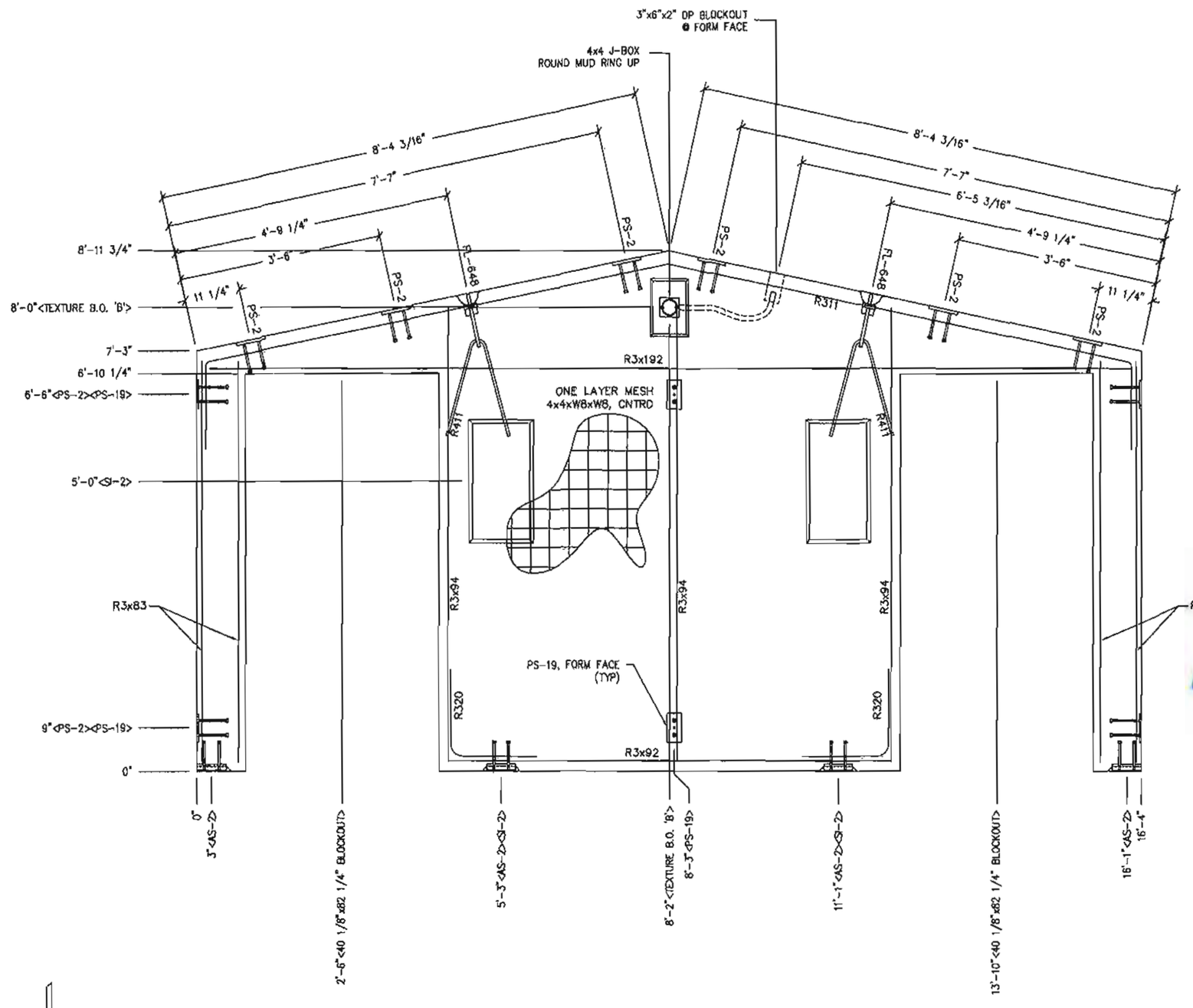

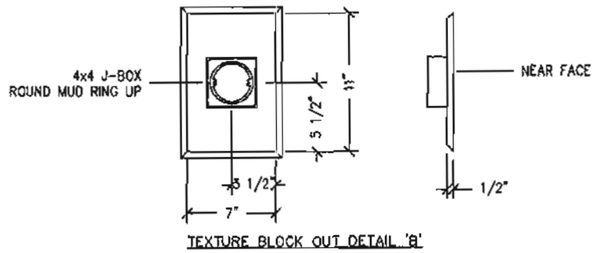

TEXTURE BLOCK OUT DETAIL 'B'

NOTES:

1. WALL THICKNESS = 4"
2. EXCEPT R311 & R411, REINFORCING BARS TO BE PLACED IN PAIRS ONE EACH FACE OF PANEL W/ 3/4" MIN. COVER
3. ALL OTHER REBAR TO BE CENTERED IN PANEL.
4. DOOR FRAMES TO BE INSTALLED DURING FINAL ASSEMBLY.

EMBEDDED MATERIALS

ITEM	QTY
AS-2	4
PS-2	10
PS-19	2
R411	2
FL-648	2
R311	1
R320	4
R3x83	8
R3x94	6
R3x192	2
R3x92	2
ROUND MUD RING	1
4x4 J-BOX	1
40 1/8" x 82 1/4" BO	2
SI-2 MOLD	2
BLOCKOUT 3"x6"x2" DP	1

CU. FT. CONC.	SQ. FT. W.W.F.
28.9 (1.07)	90

APPROXIMATE WEIGHT
4,335

HEIDEN, WILLIAM RICHARD III
STATE OF WASHINGTON
19076
REGISTERED
PROFESSIONAL ENGINEER

EXPIRES April 23, 2019

September 5, 2017

3805 N. Sullivan Bldg. #7 Spokane, WA 99216

CXT
Precast Products
901 N. Highway 77 Hillsboro, TX 76645

PROJECT TITLE
CORTEZ SECTIONAL
BUILDING NUMBER CRS-039

NOTICE

The information contained herein is proprietary and the exclusive property of CXT Incorporated. The information may only be used by the original recipient for the purpose intended. Reproduction or distribution of this information is strictly prohibited without the prior written consent of CXT Incorporated. By allowing use of this information, CXT Incorporated grants no warranty express or implied, including a warranty of merchantability or fitness for a particular purpose.

CXT Incorporated

REV.	DESCRIPTION	APPROVAL	DATE

SCALE	1/2"=1'-0"	DATE	08-24-17
DRAWN	DAN.S	FILE NO.	CRS-039
CHECKED	RDH	PLOT	24

WALL PANEL
MARK W1

DWG NO.	SHEET	REV.
CRS-07	7 of 18	

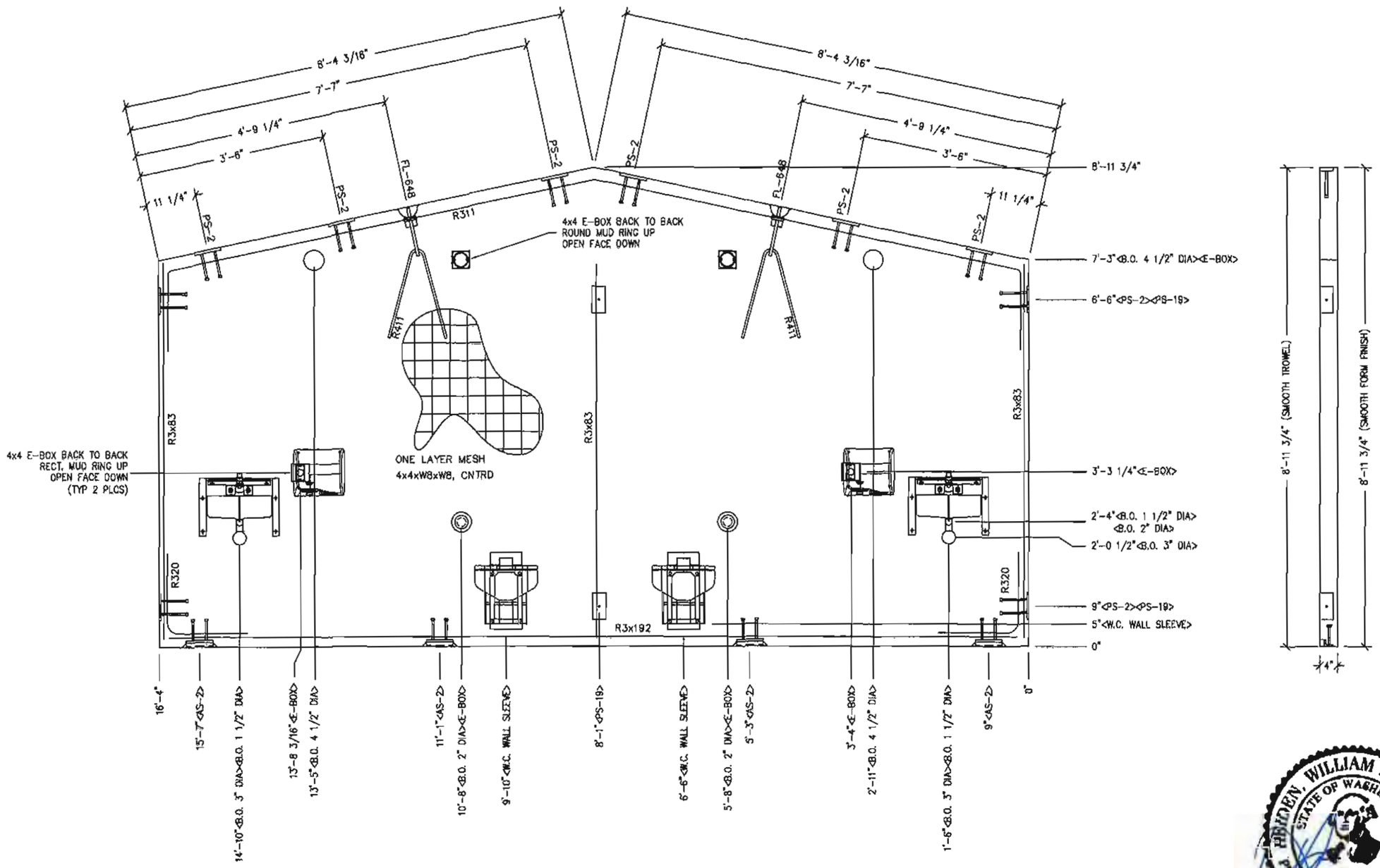

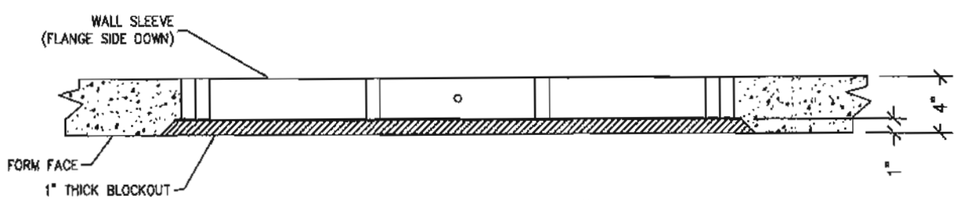

WALL SLEEVE BLOCKOUT DETAIL

NOTES:
1. WALL THICKNESS = 4"
2. EXCEPT R311 & R411, REINFORCING BARS TO BE PLACED IN PAIRS ONE EACH FACE OF PANEL W/ 3/4" MIN. COVER. ALL OTHER BARS TO BE CENTERED IN PANEL.

HIBBEN, WILLIAM RICHARD III
STATE OF WASHINGTON
39076
REGISTERED
PROFESSIONAL ENGINEER
EXPIRES April 23, 2019
September 5, 2017

EMBEDDED MATERIALS

ITEM	QTY
AS-2	4
PS-2	10
PS-19	2
R411	2
R311	1
R320	4
R3x83	6
R3x192	2
FL-648	2
BLOCKOUT 4 1/2" DIA	2
W.C. WALL SLEEVE	2
BLOCKOUT 3" DIA	2
BLOCKOUT 1 1/2" DIA	2
ROUND MUD RING	2
4x4 E-BOX	8
BLOCKOUT 2" DIA	2
RECTANGULAR MUD RING	2

CU. FT. CONC.	SQ. FT. W.W.F.
44.2 (1.64)	132

APPROXIMATE WEIGHT
6,630

3808 N. Sullivan Bldg. #7 Spokane, WA 99216
CXT
Precast Products
901 N. Highway 77 Hillsboro, TX 76645

PROJECT TITLE
CORTEZ SECTIONAL
BUILDING NUMBER CRS-039

NOTICE
The information contained herein is proprietary and the exclusive property of CXT Incorporated. The information may only be used by the original recipient for the purpose intended. Reproduction or distribution of this information is strictly prohibited without the prior written consent of CXT Incorporated. By allowing use of this information, CXT Incorporated grants no expressly, express or implied, including a warranty of merchantability or at fitness for a particular purpose.
CXT Incorporated

REV.	DESCRIPTION	APPROVED	DATE

SCALE	1/2"=1'-0"	DATE	08-24-17
DRAWN	DMA B	FILE NO.	CRS-039
CHECKED	RDW	PLOT	21

WALL PANEL
MARK W2

DWG NO.	SHEET	REV.
CRS-08	8 of 13	

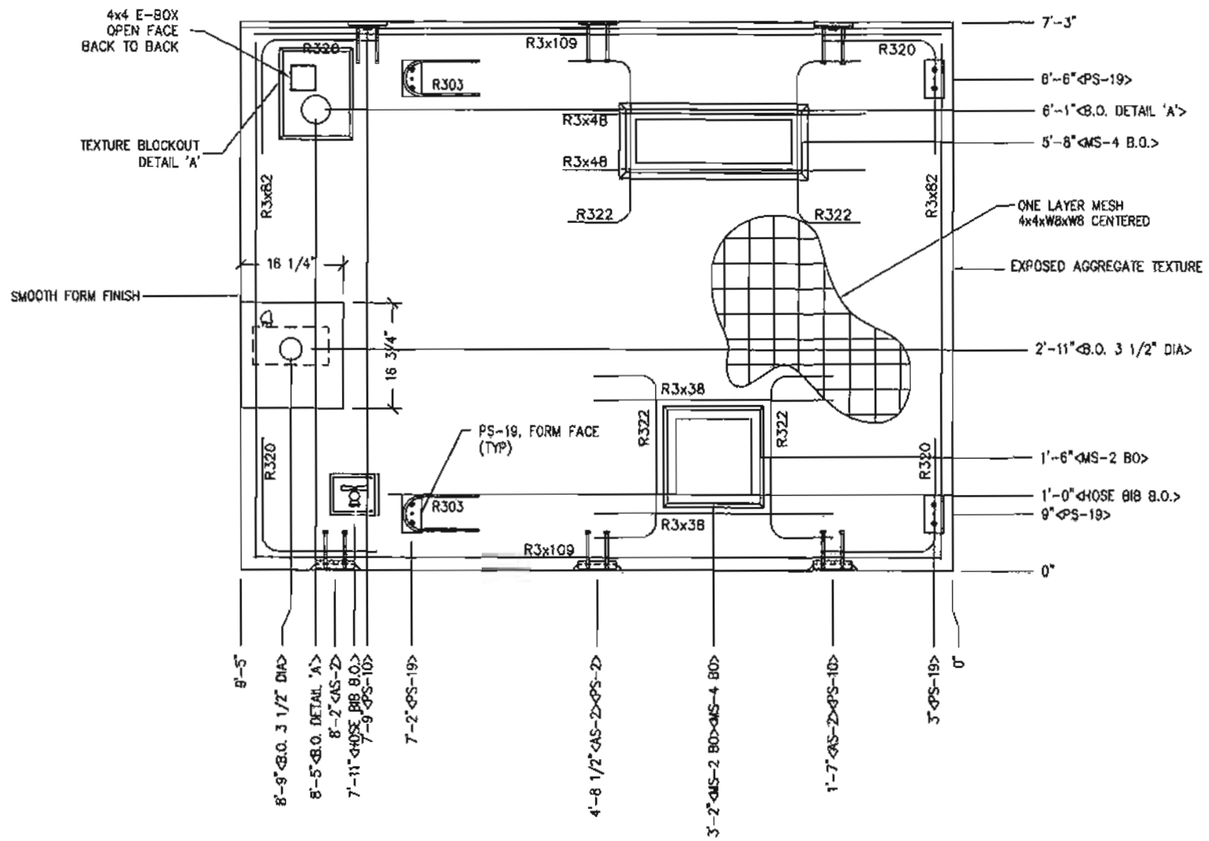

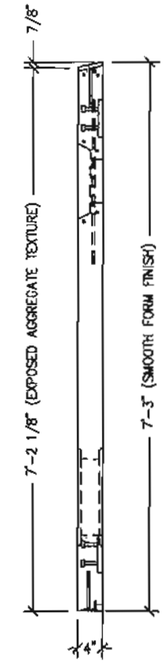

EMBEDDED MATERIALS	
ITEM	QTY
AS-2	3
PS-2	1
PS-10	2
PS-19	4
R303	2
R320	8
R3x82	4
R3x109	4
R3x48	2
R3x38	2
R322	2
4x4 E-BOX	2
BLOCKOUT 4 1/2" DIA	1
MS-4 BLOCKOUT	1
MS-2 BLOCKOUT	1
HOSE BIB B.O.	1
BLOCKOUT 3 1/2" DIA	1

CU. FT. CONC.	SQ. FT. W.W.F.
22.0 (0.93)	68

APPROXIMATE WEIGHT
3,300

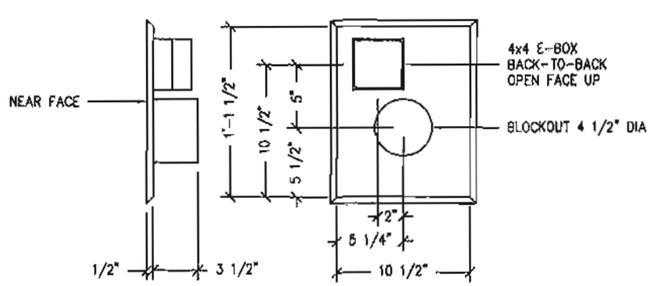

TEXTURE BLOCK OUT DETAIL 'A'
FANTECH RVF-4XL

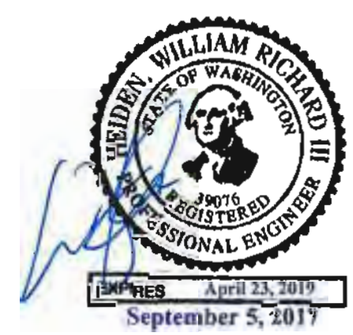

NOTES:

1. WALL THICKNESS = 4"
2. EXCEPT R303, R322, R3x48 & R3x38 REINFORCING BARS TO BE PLACED IN PAIRS ONE EACH FACE OF PANEL W/ 3/4" MIN. COVER
3. ALL OTHER REBAR TO BE CENTERED IN PANEL.

3808 N. Sullivan Bldg. #7 Spokane, WA 99216
CXT
Precast Products
901 N. Highway 77 Hillsboro, TX 76645

PROJECT FILE
CORTEZ SECTIONAL
BUILDING NUMBER CRS-039

NOTICE
The information contained herein is proprietary and the exclusive property of CXT Incorporated. The information may only be used by the original recipient for the purpose intended. Reproduction or distribution of this information is strictly prohibited without the prior written consent of CXT Incorporated. By allowing use of this information, CXT Incorporated grants no warranty, express or implied, including a warranty of merchantability or fitness for a particular purpose.
CXT Incorporated

NO.	DESCRIPTION	APPROVED	DATE
SCALE	1/2"=1'-0"	DATE	08-24-17
DRAWN	MAX B	FILE NO.	CRS-039
CHECKED	BW	PLOT	24

WALL PANEL
MARK W3

DWG NO. CRS-09
SHEET 3 / 28
REV.

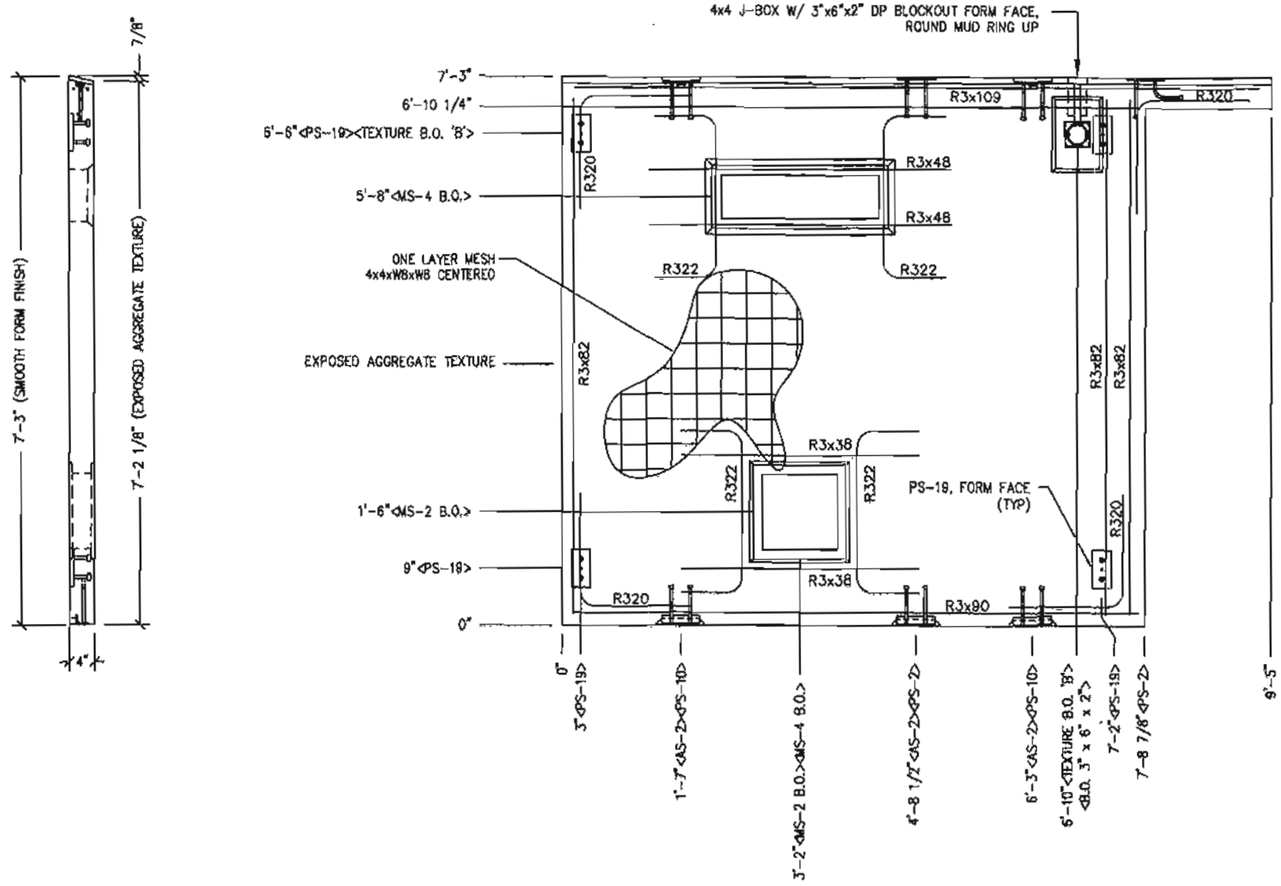

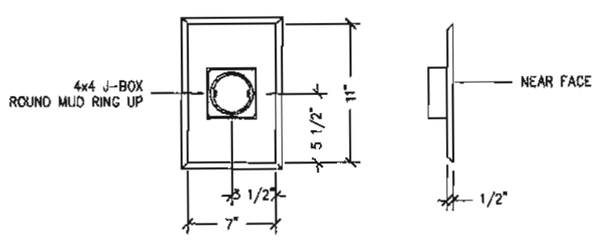

TEXTURE BLOCK OUT DETAIL 'B'

NOTES:

1. WALL THICKNESS = 4"
2. EXCEPT R322, R3x48 & R3x38 REINFORCING BARS TO BE PLACED IN PAIRS ONE EACH FACE OF PANEL W/ 3/4" MIN. COVER
3. ALL OTHER REBAR TO BE CENTERED IN PANEL.

HEIDEN, WILLIAM RICHARD III
STATE OF WASHINGTON
39076
REGISTERED
PROFESSIONAL ENGINEER

EXPIRED April 23, 2019
September 5, 2017

EMBEDDED MATERIALS	
ITEM	QTY
AS-2	3
PS-2	2
PS-10	2
PS-19	4
R3x109	2
R320	8
R3x82	6
R3x48	2
R3x38	2
R322	2
R3x90	2
BLOCKOUT 3"x6"x2" DP	1
4x4 J-BOX	1
ROUND MUD RING	1
MS-2 BLOCKOUT	1
MS-4 BLOCKOUT	1

CU. FT. CONC.	SQ. FT. W.W.F.
18.2 (0.67)	56

APPROXIMATE WEIGHT
2,730

3808 N. Sullivan Bldg. #7 Spokane, WA 99216
CXT
Precast Products
901 N. Highway 77 Hillsboro, TX 76645

PROJECT TITLE
CORTEZ SECTIONAL
BUILDING NUMBER CRS-039

NOTICE
The information contained herein is proprietary and the exclusive property of CXT Incorporated. The information may only be used by the original recipient for the purpose intended. Reproduction or distribution of this information is strictly prohibited without the prior written consent of CXT Incorporated. By allowing use of this information, CXT Incorporated grants no warranty, expressed or implied, including a warranty of merchantability or fitness for a particular purpose.
CXT Incorporated

REV.	DESCRIPTION	APPROVAL	DATE

SCALE	1/2"=1'-0"	DATE	08-24-17
DRAWN	DMA/B	FILE NO.	CRS-039
CHECKED	RDW	PLOT	24

WALL PANEL
MARK W4

DWG NO.	SHEET	REV.
CRS-10	10 / 28	

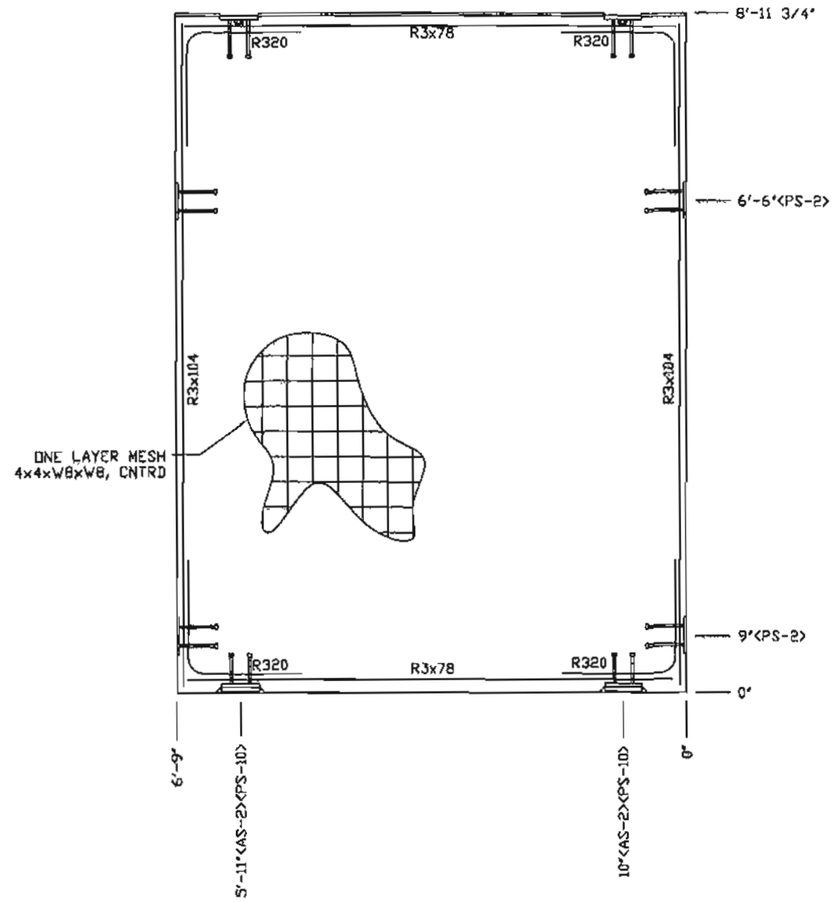

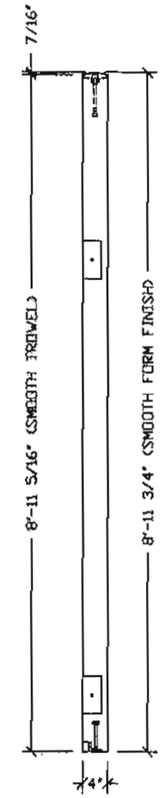

EMBEDDED MATERIALS	
ITEM	QTY
AS-2	2
PS-2	4
PS-10	2
R320	8
R3x104	4
R3x78	4

CU. FT. CONC.	SQ. FT. W.W.F.
20.2 (0.75)	60

APPROXIMATE WEIGHT
3,030

3808 N. Sullivan Bldg. #7 Spokane, WA 99216
CXT
Precast Products
901 N. Highway 77 Hillsboro, TX 76645

PROJECT TITLE
CORTEZ SECTIONAL
BUILDING NUMBER CRS-039

NOTICE
The information contained herein is proprietary and the exclusive property of CXT Incorporated. The information may only be used by the original recipient for the purpose intended. Reproduction or distribution of this information is strictly prohibited without the prior written consent of CXT Incorporated. By allowing use of this information, CXT Incorporated grants no warranty, express or implied, including a warranty of merchantability or of fitness for a particular purpose.
CXT Incorporated

NO.	DESCRIPTION	APPROVAL	DATE

SCALE	1 1/2"=1'-0"	DATE	09-24-17
DRAWN	WA 8	FILE NO.	CRS-039
CHECKED		PLOT	24

WALL PANEL
MARK W5

DWG NO. CRS-11
SHEET 11 OF 28
REV.

HEIDEN, WILLIAM RICHARD III
STATE OF WASHINGTON
39076
REGISTERED
PROFESSIONAL ENGINEER
EXPIRES April 23, 2019
September 5, 2017

NOTES:

1. WALL THICKNESS = 4"
2. REINFORCING BARS TO BE PLACED IN PAIRS ONE EACH FACE OF PANEL W/ 3/4" MIN. COVER

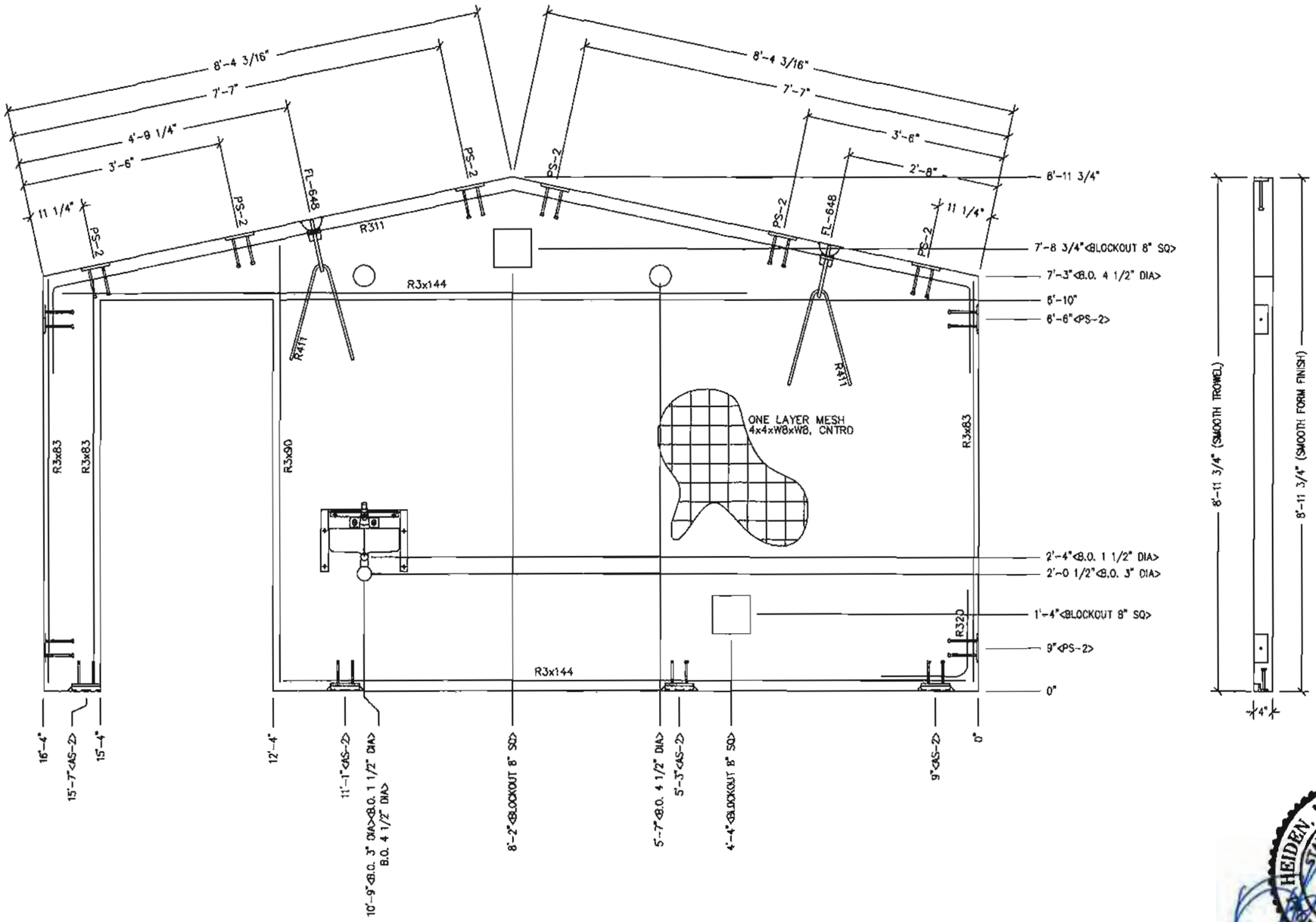

EMBEDDED MATERIALS	
ITEM	QTY
AS-2	4
PS-2	10
R3x90	2
R411	2
R311	1
R320	2
R3x83	6
R3x144	4
FL-648	2
BLOCKOUT 4 1/2" DIA	2
BLOCKOUT 3" DIA	1
BLOCKOUT 8" SQ	2
BLOCKOUT 1 1/2" DIA	1

CU. FT. CONC.	SQ. FT. W.W.F.
37.4 (1.38)	132

APPROXIMATE WEIGHT
5,602

3808 N. Sullivan Bldg. #7 Spokane, WA 99216
CXT
Precast Products
901 N. Highway 77 Hillsboro, TX 76645

PROJECT TITLE
CORTEZ SECTIONAL
BUILDING NUMBER CRS-039

NOTICE
The information contained herein is proprietary and the exclusive property of CXT Incorporated. The information may only be used by the original recipient for the purpose intended. Reproduction or distribution of this information is strictly prohibited without the prior written consent of CXT Incorporated. By allowing use of this information, CXT Incorporated grants no warranty, express or implied, including a warranty of merchantability or of fitness for a particular purpose.
CXT Incorporated

NO.	DESCRIPTION	APPROVAL	DATE

SCALE	1/2"=1'-0"	DATE	08-25-17
DRAWN	DARA B.	FILE NO.	CRS-039
CHECKED	WR	PLOT	24"

WALL PANEL
MARK W6

DWG NO.	SHEET	REV.
CRS-12	12	28

HEIDEN, WILLIAM RICHARD III
STATE OF WASHINGTON
39076
REGISTERED
PROFESSIONAL ENGINEER
EXPIRES April 23, 2019
September 5, 2017

NOTES:
1. WALL THICKNESS = 4"
2. EXCEPT R311 & R411, REINFORCING BARS TO BE PLACED IN PAIRS ONE EACH FACE OF PANEL W/ 3/4" MIN. COVER. ALL OTHER BARS TO BE CENTERED IN PANEL.

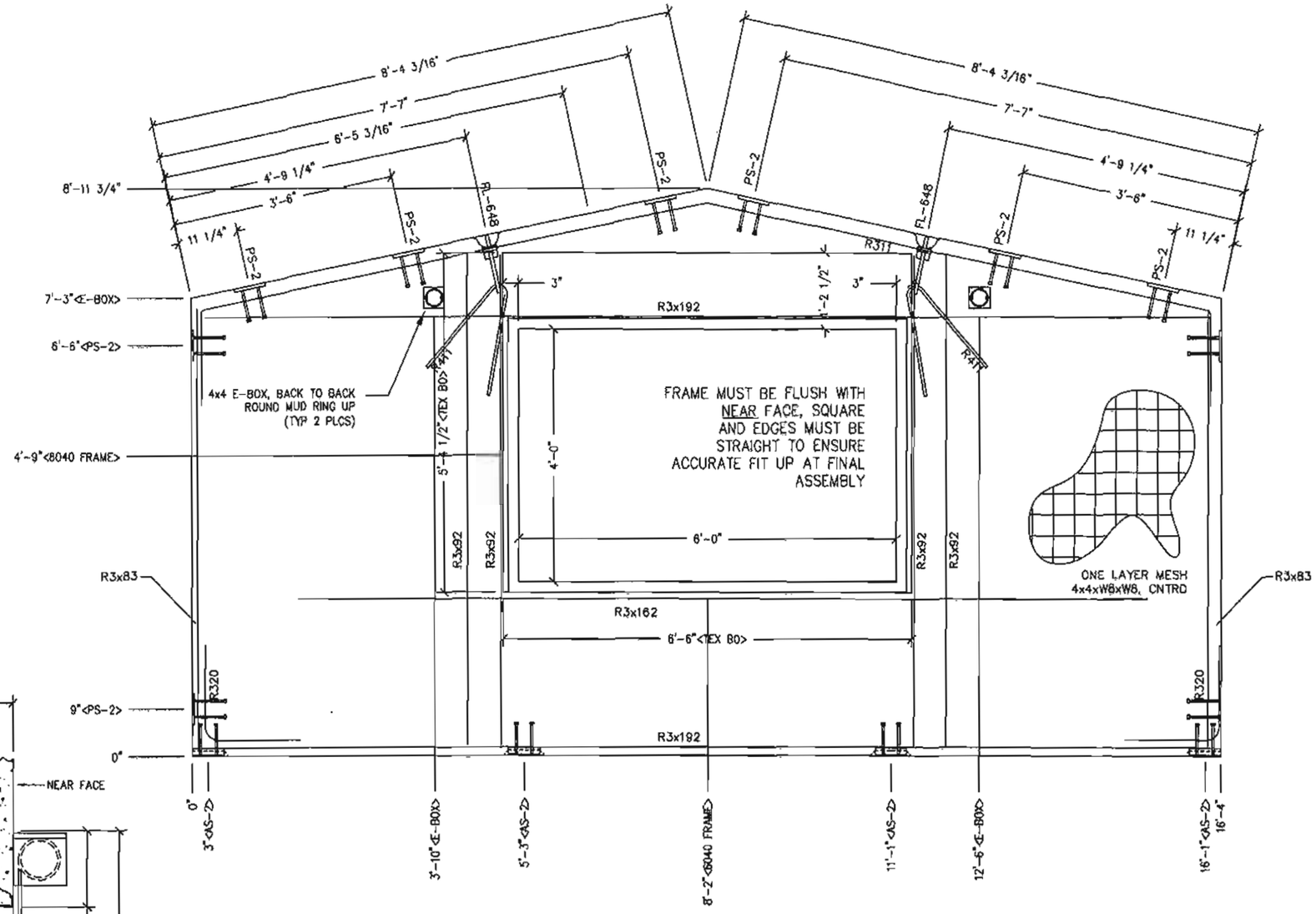

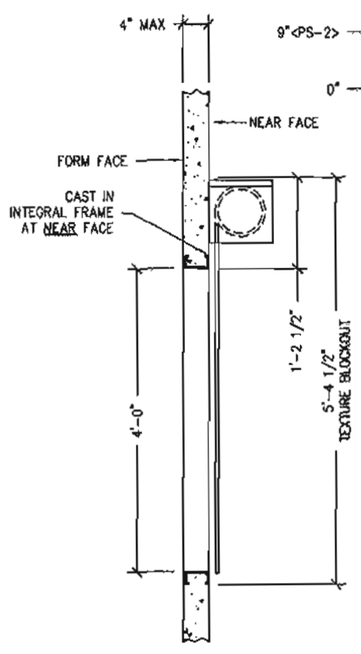

ROLL UP DOOR/
WINDOW FRAME DETAIL

EMBEDDED MATERIALS	
ITEM	QTY
AS-2	4
PS-2	10
PS-19	2
R411	2
FL-648	2
R311	1
R320	4
R3x192	2
R3x162	2
R3x83	4
R3x92	8
ROUND MUD RING	2
4x4 E-BOX	4
6040 FRAME	1

CU. FT. CONC.	SQ. FT. W.W.F.
36.2 (1.34)	132

APPROXIMATE WEIGHT
5,426

HEIDEN, WILLIAM RICHARD III
STATE OF WASHINGTON
39076
REGISTERED
PROFESSIONAL ENGINEER
EXPIRES April 23, 2019
September 5, 2017

NOTES:

1. WALL THICKNESS = 4"
2. EXCEPT R311 & R411, REINFORCING BARS TO BE PLACED IN PAIRS ONE EACH FACE OF PANEL W/ 3/4" MIN. COVER
3. ALL OTHER REBAR TO BE CENTERED IN PANEL.

3808 N. Sullivan Bldg. #7 Spokane, WA 99216
CXT
Precast Products
901 N. Highway 77 Hillsboro, TX 76645

PROJECT TITLE
CORTEZ SECTIONAL
BUILDING NUMBER CRS-039

NOTICE
The information contained herein is proprietary and the exclusive property of CXT Incorporated. The information may only be used by the original recipient for the purpose intended. Reproduction or distribution of this information is strictly prohibited without the prior written consent of CXT Incorporated. By allowing use of this information, CXT Incorporated grants no warranty, express or implied, including a warranty of merchantability or of fitness for a particular purpose.
CXT Incorporated

REV.	DESCRIPTION	APPROVAL	DATE
SCALE	1/2"=1'-0"	DATE	06-25-17
DRAWN	DAWA Ø	FILE NO.	CRS-039
CHECKED	RDW	PLOT	24

WALL PANEL
MARK W7

DWG NO.	SHEET	REV.
CRS-13	13 / 30	

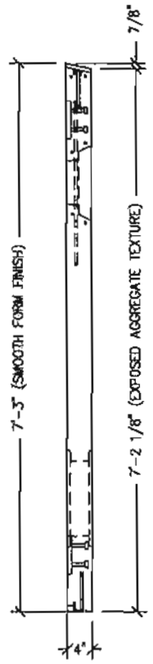

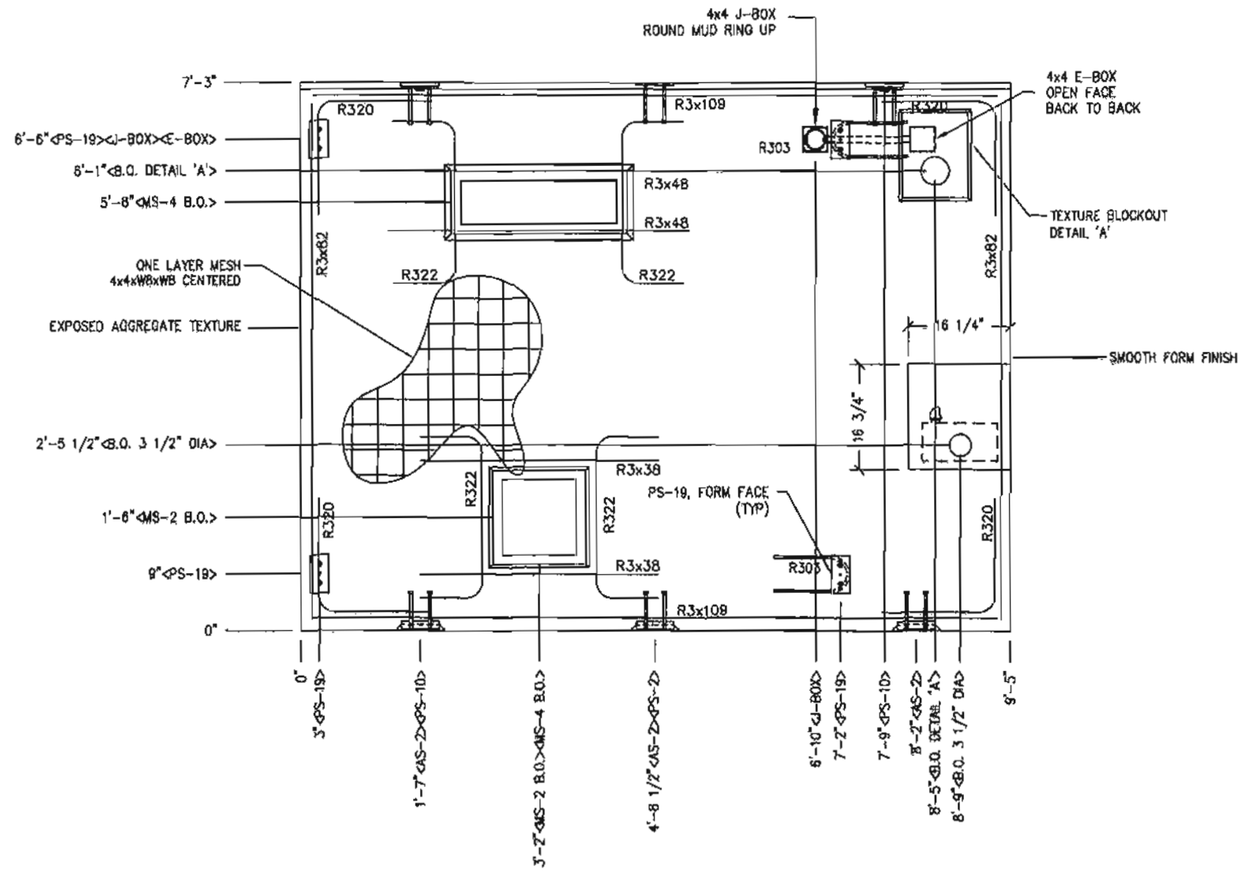

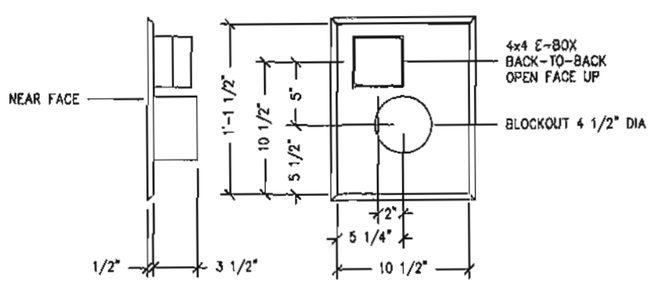

TEXTURE BLOCK OUT DETAIL 'A'
FANTECH RVF-4XL

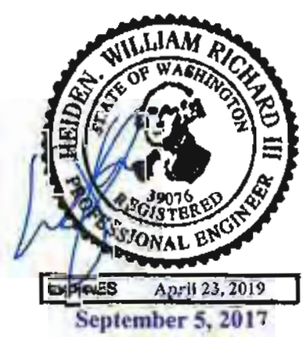

NOTES:

1. WALL THICKNESS = 4"
2. EXCEPT R303, R322, R3x48 & R3x38 REINFORCING BARS TO BE PLACED IN PAIRS ONE EACH FACE OF PANEL W/ 3/4" MIN. COVER
3. ALL OTHER REBAR TO BE CENTERED IN PANEL.

EMBEDDED MATERIALS	
ITEM	QTY
AS-2	3
PS-2	1
PS-10	2
PS-19	4
R303	2
R320	8
R3x82	4
R3x109	4
R3x48	2
R3x38	2
R322	2
4x4 E-BOX	2
BLOCKOUT 4 1/2" DIA	1
MS-4 BLOCKOUT	1
MS-2 BLOCKOUT	1
BLOCKOUT 3 1/2" DIA	1
4x4 J-BOX	1
ROUND MUD RING	1

CU. FT. CONC.	SQ. FT. W.W.F.
22.0 (0.82)	68

APPROXIMATE WEIGHT
3,330

3808 N. Sullivan Bldg. #7 Spokane, WA 99216
CXT
Precast Products
901 N. Highway 77 Hillsboro, TX 76645

PROJECT TITLE
CORTEZ SECTIONAL
BUILDING NUMBER CRS-039

NOTICE
The information contained herein is proprietary and the exclusive property of CXT Incorporated. The information may only be used by the original recipient for the purpose intended. Reproduction or distribution of this information is strictly prohibited without the prior written consent of CXT Incorporated. By allowing use of this information, CXT Incorporated grants no warranty, express or implied, including a warranty of merchantability or of fitness for a particular purpose.
CXT Incorporated

REV.	NOTE	APPROVAL	DATE
SCALE	1/2"=1'-0"	DATE	08-25-17
DRAWN	DAVE B	FILE NO.	CRS-039
CHECKED	NW	PLOT	24

WALL PANEL
MARK W9

DWG NO. CRS-14
SHEET 14 / 28
REV.

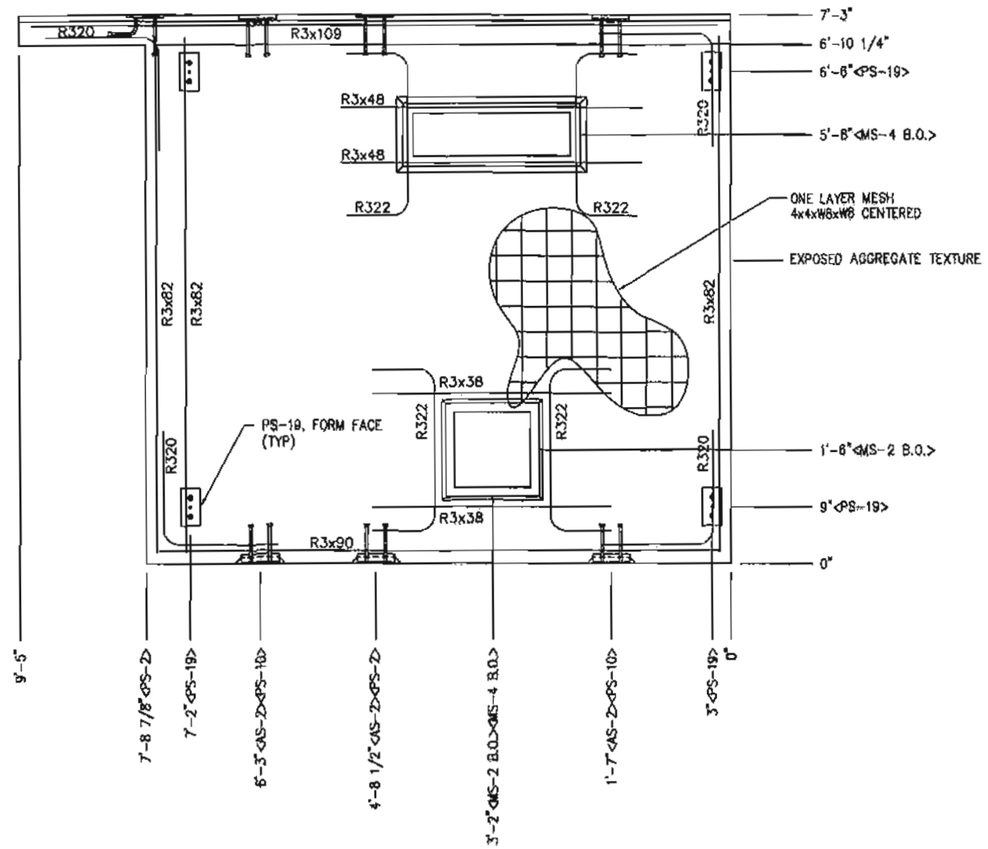

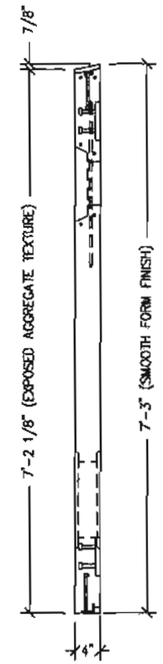

EMBEDDED MATERIALS	
ITEM	QTY
AS-2	3
PS-2	2
PS-10	2
PS-19	4
R3x109	2
R320	8
R3x82	6
R3x48	2
R3x38	2
R322	2
R3x90	2
MS-2 BLOCKOUT	1
MS-4 BLOCKOUT	1

CU. FT. CONC.	SQ. FT. W.W.F.
18.2 (0.67)	56

APPROXIMATE WEIGHT
2,730

HEIDEN, WILLIAM RICHARD III
STATE OF WASHINGTON
39076
REGISTERED
PROFESSIONAL ENGINEER
EXPIRES April 23, 2019
September 5, 2017

NOTES:

1. WALL THICKNESS = 4"
2. EXCEPT R322, R3x48 & R3x38 REINFORCING BARS TO BE PLACED IN PAIRS ONE EACH FACE OF PANEL W/ 3/4" MIN. COVER
3. ALL OTHER REBAR TO BE CENTERED IN PANEL.

3808 N. Sullivan Bldg. #7 Spokane, WA 99216
CXT
Precast Products
901 N. Highway 77 Hillsboro, TX 76645

PROJECT TITLE
CORTEZ SECTIONAL
BUILDING NUMBER CRS-039

NOTICE
The information contained herein is proprietary and the exclusive property of CXT Incorporated. The information may only be used by the original recipient for the purposes intended. Reproduction or distribution of this information is strictly prohibited without the prior written consent of CXT Incorporated. By allowing use of this information, CXT Incorporated grants no warranty, express or implied, including a warranty of merchantability or of fitness for a particular purpose.

CXT Incorporated

REV.	REVISION	APPROVED	DATE

SCALE	1/2"=1'-0"	DATE	06-28-17
DRAWN	DMR-B	FILE NO.	CRS-039
CHECKED	RDW	PLOT	2"

WALL PANEL
MARK W9

DWG NO. CRS-1 SHEET 15 / 28 REV.

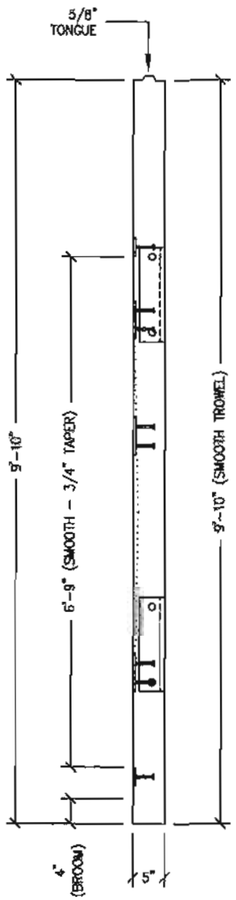

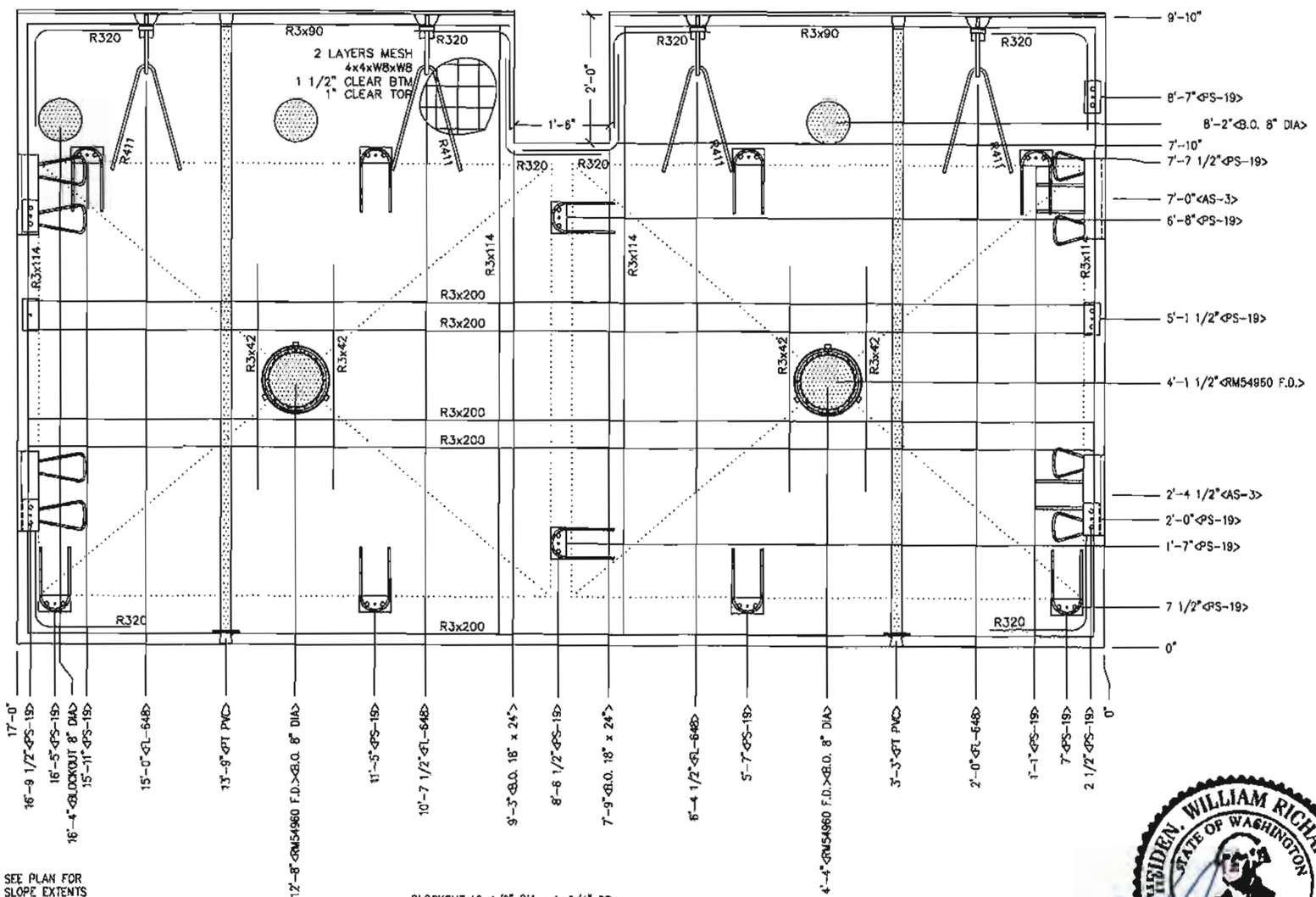

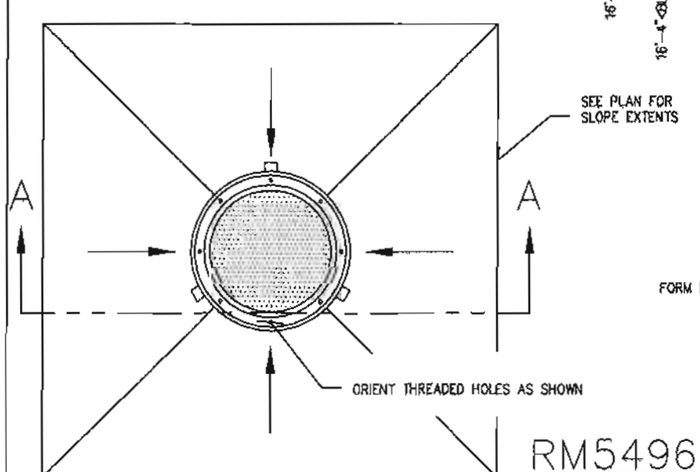

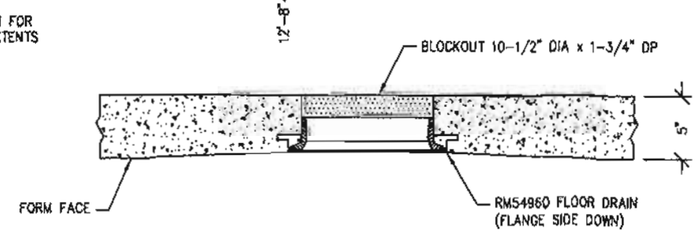

SECTION A-A

RM54960 FLOOR DRAIN BLOCKOUT DETAIL

NOTES:

1. FLOOR TO BE CAST UPSIDE DOWN
1. FLOOR THICKNESS = 5" PAN DEPTH = 3/4"
2. EXCEPT R303, R411, & R390 REINFORCING BARS TO BE PLACED IN PAIRS ONE EACH FACE OF PANEL W/ 1 1/4" MIN. COVER

EMBEDDED MATERIALS

ITEM	QTY
AS-3	4
PS-19	16
R303	10
R320	16
R3x90	2
R3x114	8
R3x200	10
R3x42	8
R411	4
FL-648	4
RM54960 F.D.	2
BLOCKOUT 18"x24"	1
BLOCKOUT 8" DIA	3
PT CHUCK	2
1" PVC SCHED40 x 9'-5"	2

CU. FT. CONC.	SQ. FT. W.W.F.
67.7 (2.51)	328

APPROXIMATE WEIGHT
10,155

3808 N. Sullivan Bldg. J7 Spokane, WA 99216
CXT Precast Products
901 N. Highway 77 Hillsboro, TX 76645

PROJECT TITLE
CORTEZ SECTIONAL
BUILDING NUMBER CRS-039

NOTICE
The information contained herein is proprietary and the exclusive property of CXT Incorporated. The information may only be used by the original recipient for the purpose intended. Reproduction or distribution of this information is strictly prohibited without the prior written consent of CXT Incorporated. By allowing use of this information, CXT Incorporated grants no express or implied, including a warranty of merchantability or of fitness for a particular purpose.
CXT Incorporated

REV.	DESCRIPTION	APPROVAL	DATE
SCALE	1/2"=1'-0"	DATE	06-22-17
DRAWN	RAMA B	FILE NO.	G-039
CHECKED	RDW	PLOT	1:24

FLOOR SLAB
MARK 61

DWG NO. CRS-113 SHEET 16 / 28 REV.

WILLIAM RICHARD HEIDEN III
STATE OF WASHINGTON
19076
REGISTERED PROFESSIONAL ENGINEER
EXPIRES April 23, 2019
September 5, 2017

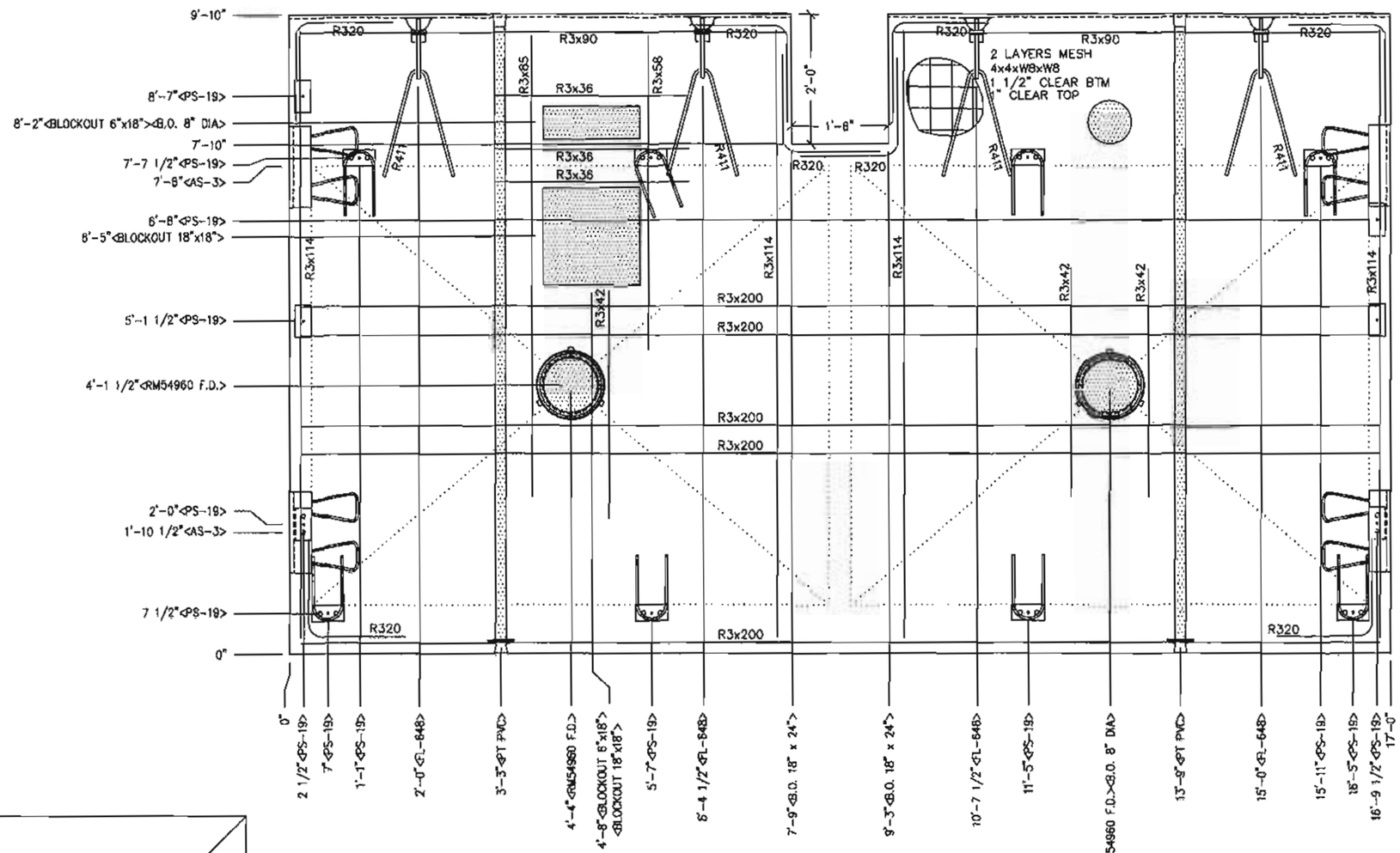

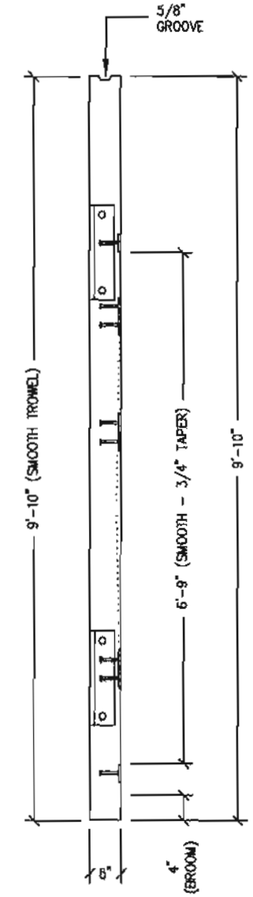

EMBEDDED MATERIALS	
ITEM	QTY
AS-3	4
PS-19	14
R303	8
R320	16
R3x90	2
R3x114	8
R3x200	10
R3x42	6
R411	4
FL-648	4
RM54960 F.D.	2
BLOCKOUT 18"x24"	1
BLOCKOUT 8" DIA	1
PT CHUCK	2
1" PVC SCHED40 x 9'-5"	2
R3x85	2
BLOCKOUT 6"x18"	1
R3x36	6
BLOCKOUT 18"x18"	1
R3x58	2

CU. FT. CONC.	SQ. FT. W.W.F.
68.3 (2.53)	328

APPROXIMATE WEIGHT
10,245

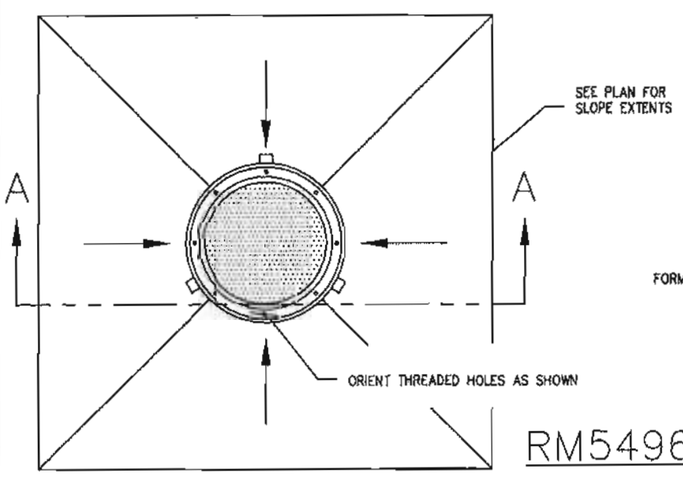

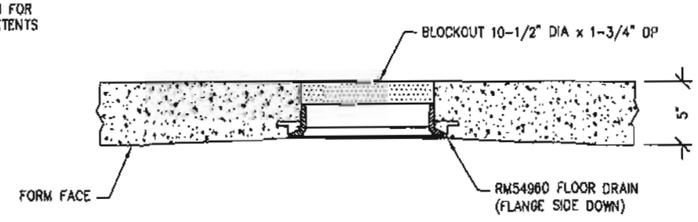

SECTION A-A

RM54960 FLOOR DRAIN BLOCKOUT DETAIL

NOTES:

1. FLOOR TO BE CAST UPSIDE DOWN
1. FLOOR THICKNESS = 5" PAN DEPTH = 3/4"
2. EXCEPT R303, R411, & R390 REINFORCING BARS TO BE PLACED IN PAIRS ONE EACH FACE OF PANEL W/ 1 1/4" MIN. COVER

HEIDEN, WILLIAM RICHARD III
STATE OF WASHINGTON
39076
REGISTERED
PROFESSIONAL ENGINEER

April 23, 2019

September 5, 2017

3808 N. Sullivan Bldg. #7 Spokane, WA 99216

CXT Precast Products

901 N. Highway 77 Hillsboro, TX 76645

PROJECT TITLE
CORTEZ SECTIONAL
BUILDING NUMBER CRS-039

NOTICE

The information contained herein is proprietary and the exclusive property of CXT Incorporated. The information may only be used by the original recipient for the purposes intended. Reproduction or distribution of the information is strictly prohibited without the prior written consent of CXT Incorporated. By allowing use of this information, CXT Incorporated grants no warranty, express or implied, including a warranty of merchantability or of fitness for a particular purpose.

CXT Incorporated

REV.	DESCRIPTION	APPROVAL	DATE

SCALE	1/2"=1'-0"	DATE	06-28-17
DRAWN	DAN B	FILE NO.	CRS-039
CHECKED		PLOT	24

FLOOR SLAB
MARK F2

DWG NO. CRS-17 SHEET 17 / 28 REV.

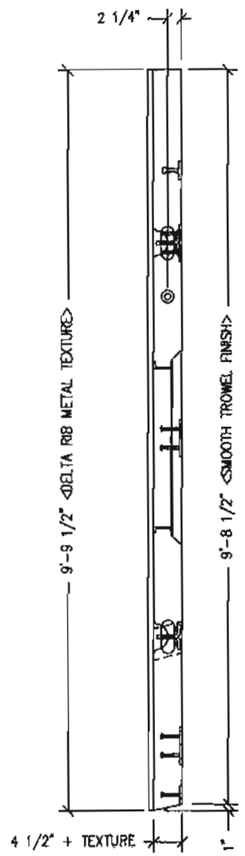

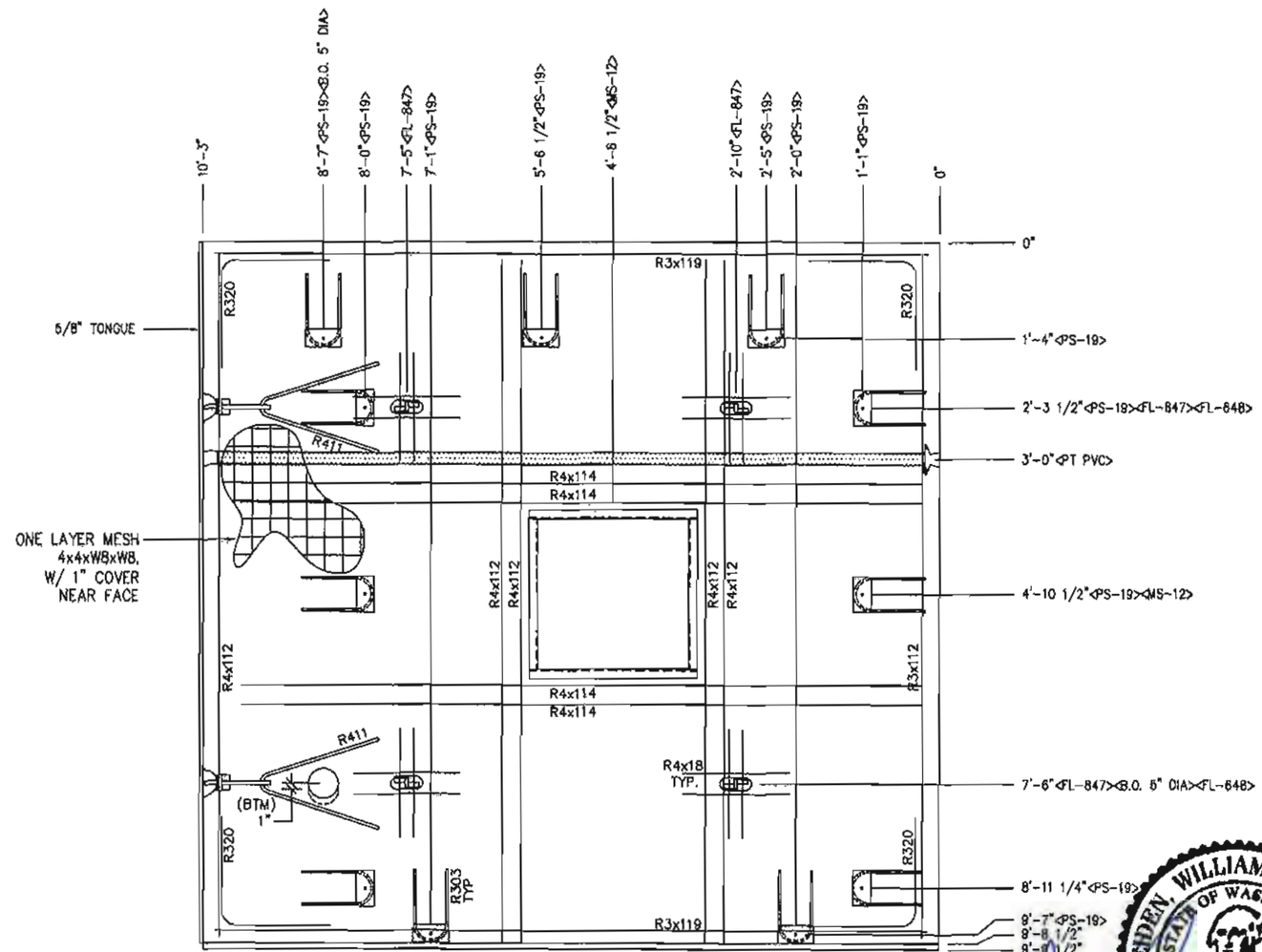

EMBEDDED MATERIALS	
ITEM	QTY
FL-648	2
FL-847	4
PS-19	11
R303	11
R320	8
R3x112	2
R3x119	4
BLOCKOUT 5" DIA	1
R411	2
R4x18	16
R4x112	5
1" PVC SCHED40 x 9'-10"	1
PT CHUCK	1
R4x114	4
MS-12	1

CU. FT. CONC.	SQ. FT. W.W.F.
37.8 (1.40)	100

APPROXIMATE WEIGHT
5,670

HEDEN, WILLIAM RICHARD III
STATE OF WASHINGTON
39076
REGISTERED
PROFESSIONAL ENGINEER

EXPIRES April 23, 2019

September 5, 2017

NOTES:

1. ROOF THICKNESS = 4 1/2" MIN. + FINISH
2. EXCEPT R4x114, R4x112, R303 & R4x18, REINFORCING BARS TO BE PLACED IN PAIRS ONE EACH FACE OF PANEL W/ 1 1/4" MIN. COVER.
3. BARS R4x114, R4x112, R4x18 ARE TO BE PLACED AT NEAR FACE W/ 1" COVER.
4. ALL OTHER BARS TO BE CENTERED IN PANEL.

3508 N. Sullivan Bldg. #7 Spokane, WA 99216

CXT
Precast Products

901 N. Highway 77 Hillsboro, TX 76645

PROJECT TITLE
CORTEZ SECTIONAL
BUILDING NUMBER CRS-039

NOTICE

The information contained herein is proprietary and the exclusive property of CXT Incorporated. The information may only be used by the original recipient for the purpose intended. Reproduction or distribution of this information is strictly prohibited without the prior written consent of CXT Incorporated. By allowing use of this information, CXT Incorporated grants no warranty, express or implied, including a warranty of merchantability or of fitness for a particular purpose.

CXT Incorporated

REV.	DESCRIPTION	APPROVAL	DATE
SCALE	1"=1'-0"	DATE	08-28-17
DRAWN	LANA B	FILE NO.	CRS-039
CHECKED	BOW	PLOT	24

ROOF SLAB
MARK R1

DWG NO.	SHEET	REV.
CRS-18	18 / 28	

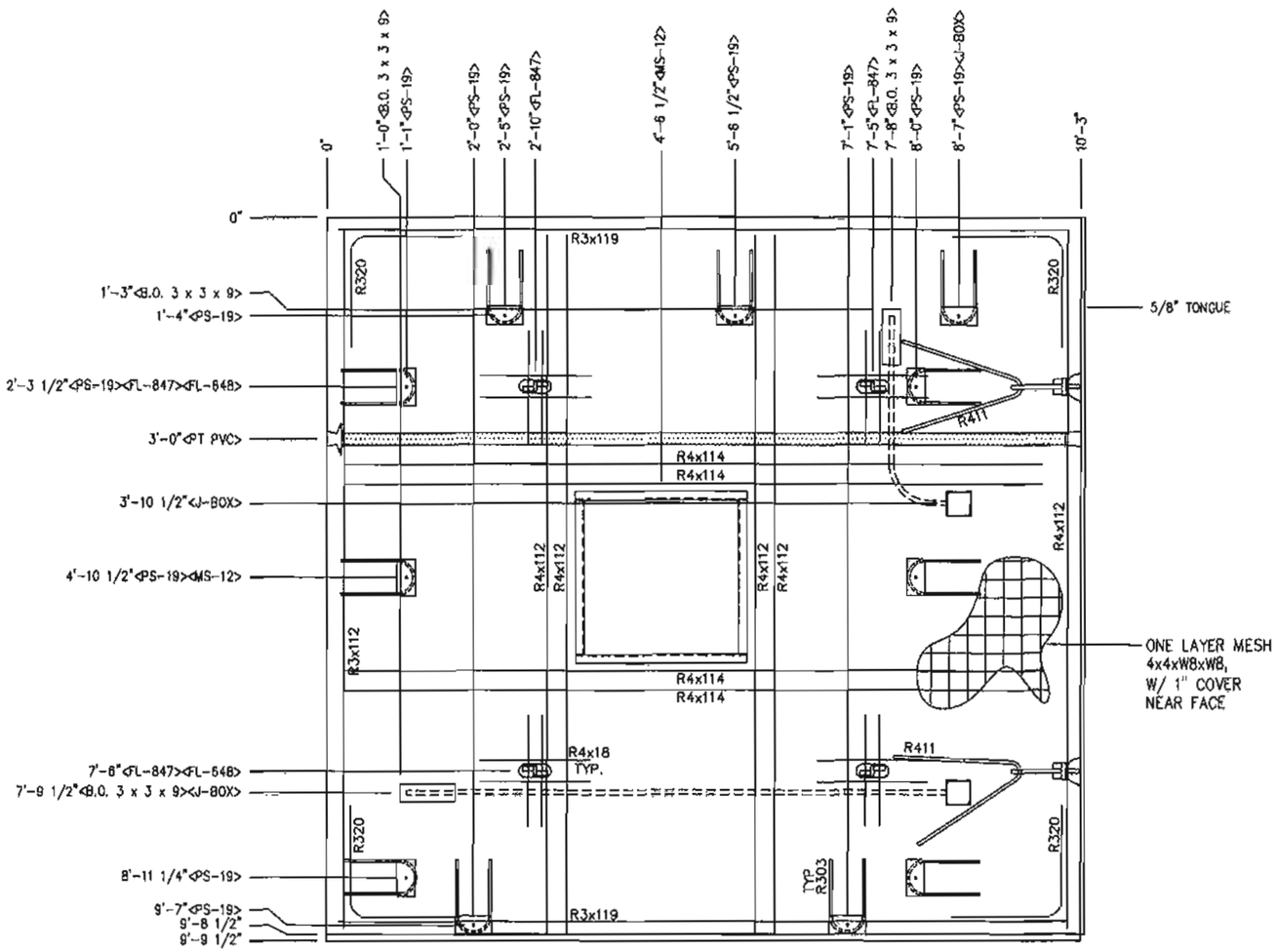

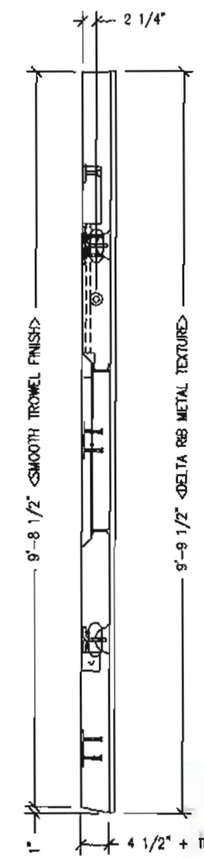

EMBEDDED MATERIALS	
ITEM	QTY
FL-648	2
FL-847	4
PS-19	11
R303	11
R320	8
R3x112	2
R3x119	4
BLOCKOUT 3"x3"x9"	2
R411	2
R4x18	16
R4x112	5
1" PVC SCHED40 x 9'-10"	1
PT CHUCK	1
4x4 J-BOX	2
MS-12	1
R4x114	4

CU. FT. CONC.	SQ. FT. W.W.F.
37.8 (1.40)	100

APPROXIMATE WEIGHT
5,670

NOTES:

1. ROOF THICKNESS = 4 1/2" MIN. + FINISH
2. EXCEPT R4x114, R4x112, R303 & R4x18, REINFORCING BARS TO BE PLACED IN PAIRS ONE EACH FACE OF PANEL W/ 1 1/4" MIN. COVER.
3. BARS R4x114, R4x112, R4x18 ARE TO BE PLACED AT NEAR FACE W/ 1" COVER.
4. ALL OTHER BARS TO BE CENTERED IN PANEL.

HEIDEN, WILLIAM RICHARD III
STATE OF WASHINGTON
39076
REGISTERED
PROFESSIONAL ENGINEER
EXPIRES April 23, 2019
September 5, 2017

3606 N. Sullivan Bldg. #7 Spokane, WA 99216
CXT
Precast Products
901 N. Highway 77 Hillsboro, TX 76645

PROJECT TITLE
CORTEZ SECTIONAL
BUILDING NUMBER CRS-039

NOTICE
The information contained herein is proprietary and the exclusive property of CXT Incorporated. The information may only be used by the original recipient for the purpose intended. Reproduction or distribution of this information is strictly prohibited without the prior written consent of CXT Incorporated. By allowing use of this information, CXT Incorporated grants no warranty, express or implied, including a warranty of merchantability or of fitness for a particular purpose.

CXT Inc. Approved

NO.	DESCRIPTION	APPROVED	DATE

SCALE	1/2"=1'-0"	DATE	08-18-17
DRAWN	GANA B	PROJECT NO.	CRS-039
CHECKED	ADW	PLCH	28

ROOF SLAB
MARK R2

DWG NO.	SHEET	REV.
CRS-19	19 / 28	

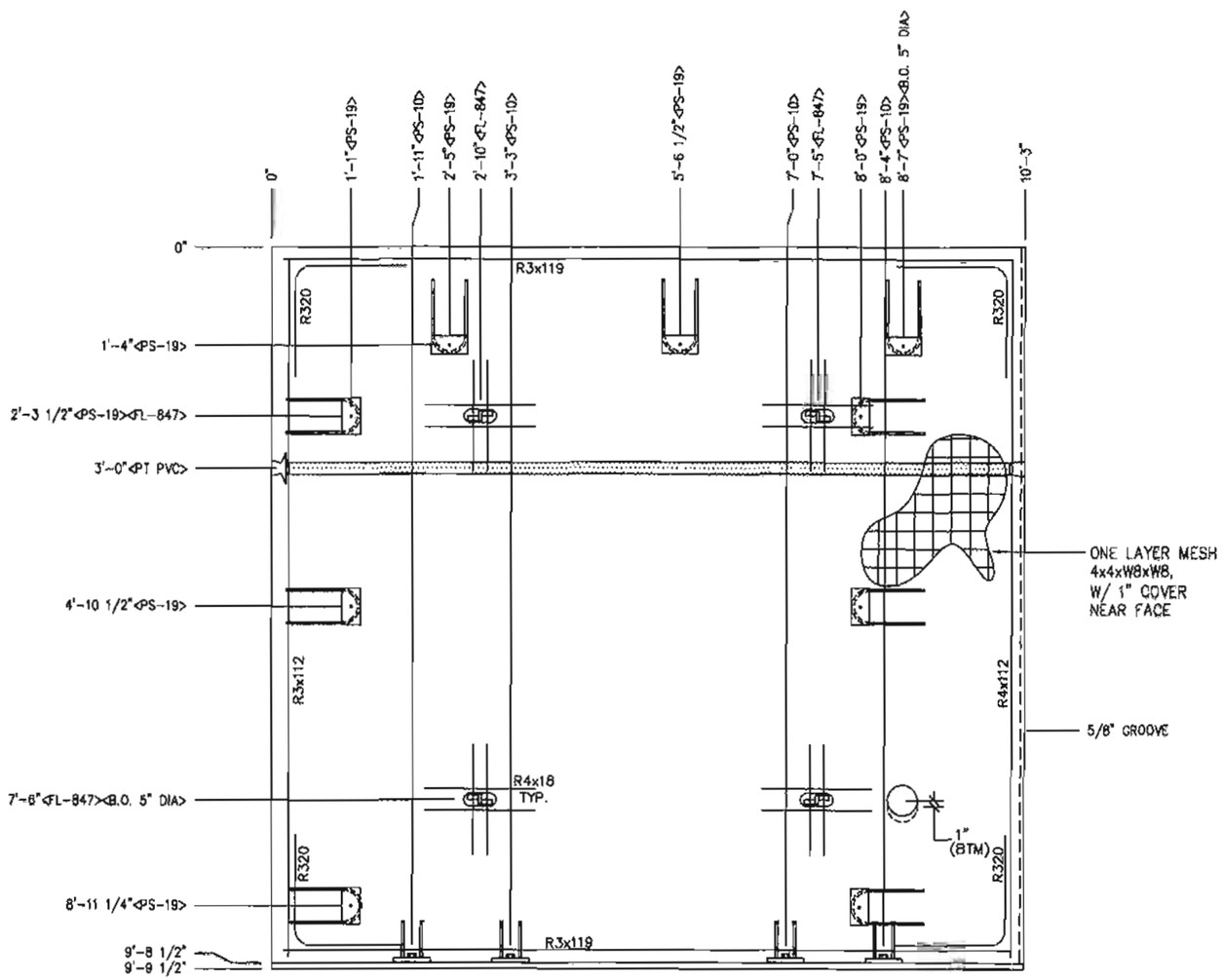

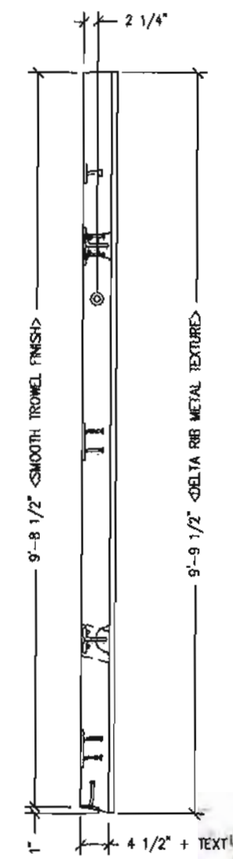

EMBEDDED MATERIALS	
ITEM	QTY
PT CHUCK	1
FL-847	4
PS-19	9
R303	9
R320	8
R3x112	2
R3x119	4
BLOCKOUT 5" DIA	1
PS-10	4
R4x18	16
R4x112	1
1" PVC SCHED40 x 9'-10"	1

CU. FT. CONC.	SQ. FT. W.W.F.
39.4 (1.46)	100

APPROXIMATE WEIGHT
5,910

NOTES:

1. ROOF THICKNESS = 4 1/2" MIN. + FINISH
2. EXCEPT R4x112, R303 & R4x18, REINFORCING BARS TO BE PLACED IN PAIRS ONE EACH FACE OF PANEL W/ 1 1/4" MIN. COVER
3. BARS R4x18 ARE TO BE PLACED AT NEAR FACE W/ 1" COVER.
4. ALL OTHER BARS TO BE CENTERED IN PANEL.

HEIDEN, WILLIAM RICHARD III
STATE OF WASHINGTON
39076
REGISTERED
PROFESSIONAL ENGINEER

EXPIRES April 23, 2019
September 5, 2017

3808 N. Sullivan Bldg. #7 Spokane, WA 99216
CXT
Precast Products
901 N. Highway 77 Hillsboro, TX 76645

PROJECT TITLE
CORTEZ SECTIONAL
BUILDING NUMBER CRS-039

NOTICE
The information contained herein is proprietary and the exclusive property of CXT Incorporated. The information may only be used by the original recipient for the purpose intended. Reproduction or distribution of this information is strictly prohibited without the prior written consent of CXT Incorporated. By allowing use of this information, CXT Incorporated grants no warranty, express or implied, including a warranty of merchantability or of fitness for a particular purpose.

CXT Approved

NO.	DESCRIPTION	APPROVED	DATE

SCALE	1/2"=1'-0"	DATE	06-20-17
DRAWN	DAN B	FILE NO.	CRS-039
CHECKED	ROB	PLANT	24

ROOF SLAB
MARK R3

DWG NO.	SHEET	REV.
CRS-20	20 / 28	

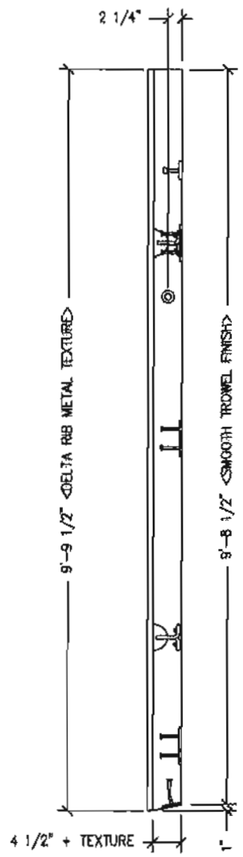

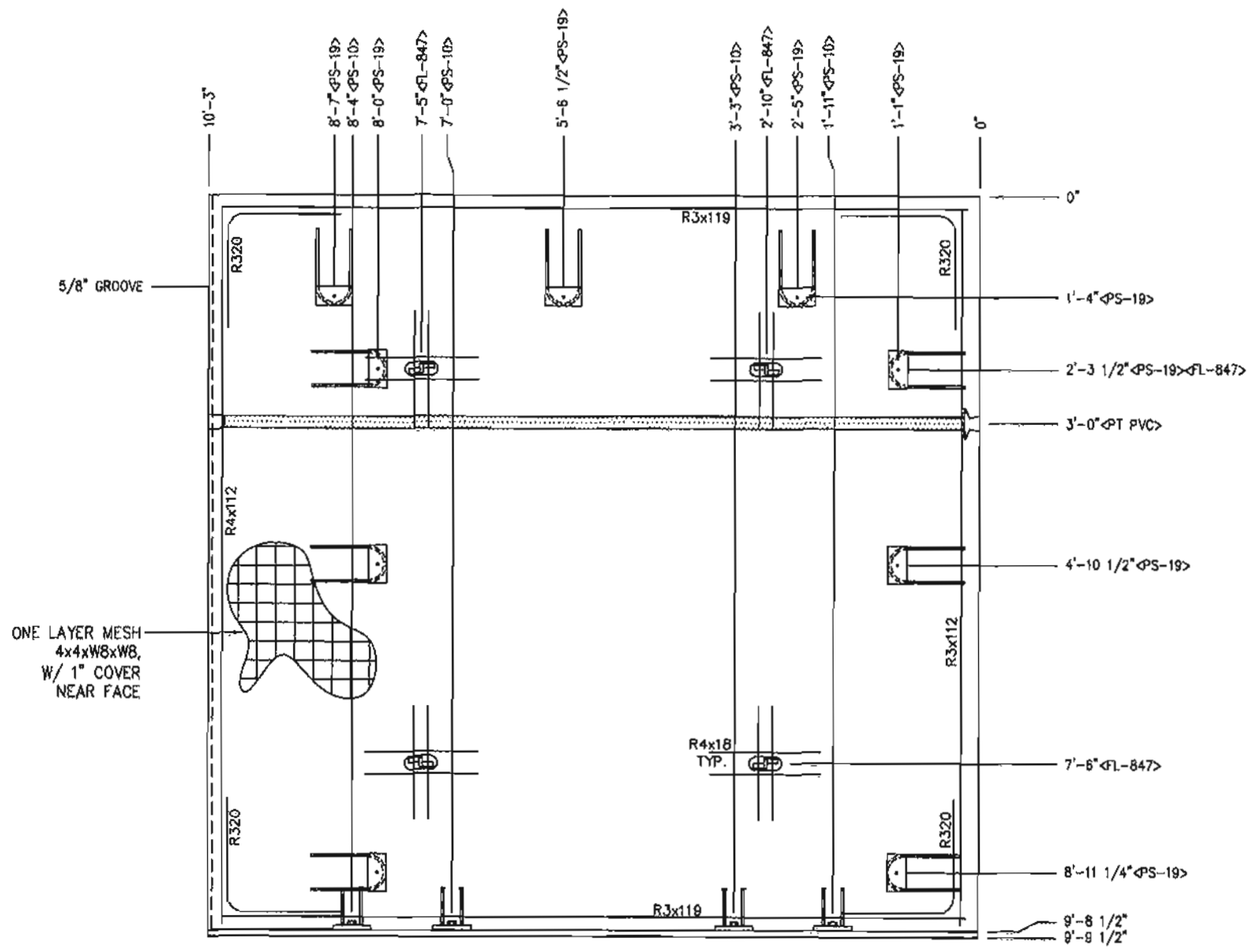

EMBEDDED MATERIALS	
ITEM	QTY
PT CHUCK	1
FL-847	4
PS-19	9
R303	9
R320	8
R3x112	2
R3x119	4
1" PVC SCHED40 x 9'-10"	1
PS-10	4
R4x18	16
R4x112	1

CU. FT. CONC.	SQ. FT. W.W.F.
39.4 (1.46)	100

APPROXIMATE WEIGHT
5,910

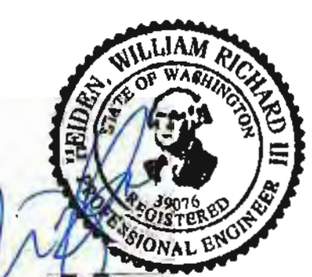

EXPIRES April 23, 2019
September 5, 2017

NOTES:

1. ROOF THICKNESS = 4 1/2" MIN. + FINISH
2. EXCEPT R4x112, R303 & R4x18, REINFORCING BARS TO BE PLACED IN PAIRS ONE EACH FACE OF PANEL W/ 1 1/4" MIN. COVER
3. BARS R4x18 ARE TO BE PLACED AT NEAR FACE W/ 1" COVER.
4. ALL OTHER BARS TO BE CENTERED IN PANEL.

3808 N. Sullivan Bldg. #7 Spokane, WA 99216
CXT
Precast Products
901 N. Highway 77 Hillsboro, TX 76645

PROJECT TITLE
CORTEZ SECTIONAL
BUILDING NUMBER CRS-039

NOTICE
The information contained herein is proprietary and the exclusive property of CXT Incorporated. The information may only be used by the original recipient for the purpose intended. Reproduction or distribution of this information is strictly prohibited without the prior written consent of CXT Incorporated. By allowing use of this information, CXT Incorporated grants no warranties, express or implied, including a warranty of merchantability or of fitness for a particular purpose.
CXT Incorporated

REV.	DESCRIPTION	APPROVAL	DATE
SCALE	1/2"=1'-0"	DATE	08-21-17
DRAWN	DMA B	FILE	
CHECKED	BW	PLOT	

ROOF SLAB
MARK R4

DWG NO. CRS-21
SHEET 21 / 28
REV.

NOTE:

THIS FACTORY ASSEMBLED BUILDING, AS CONSTRUCTED, PROVIDES A RIGID BOX TYPE STRUCTURAL SYSTEM. VERTICAL LOADS ARE TRANSFERRED PRIMARILY THROUGH BEARING WALLS TO THE STRUCTURAL SLAB FLOOR OF THE BUILDING. THE VERTICAL LOADS ARE THEN DISTRIBUTED THROUGH THE REINFORCED CONCRETE FLOOR TO THE PREPARED GRANULAR, NON-FROST SUSCEPTIBLE (NFS) SUB-BASE WHICH DISTRIBUTES THE VERTICAL LOADS IN RELATIVELY UNIFORM FASHION TO THE NATIVE SUB-GRADE. AS WITH MOST CONSTRUCTION, THIS DOES REQUIRE THE NATIVE SUB-GRADE TO BE STRIPPED OF VEGETATION AND TOP SOIL PRIOR TO PLACEMENT OF THE PREPARED GRANULAR SUB-BASE. DUE TO THE INHERENT STIFFNESS OF THE BUILDING, IT WILL REMAIN SAFE AND STRUCTURALLY SOUND IN THE UNLIKELY EVENT OF FREEZING ACTION BELOW THE BUILDING REGARDLESS OF NATURAL FREEZE/ THAW CYCLES ANTICIPATED TO BE ENCOUNTERED IN THE STATE OF WASHINGTON.

LATERAL LOADS ARE TRANSFERRED TO THE GROUND THROUGH FRICTIONAL RESISTANCE WITHOUT SLIDING OR SHIFTING BETWEEN THE BUILDING FLOOR SLAB AND THE PREPARED SOIL AND GRAVEL SUB-BASE ON WHICH THE BUILDING RESTS. SEISMIC ANALYSES ARE BASED ON LOADS DETERMINED IN ACCORDANCE WITH THE INTERNATIONAL BUILDING CODE USING PARAMETERS, WHICH MEET OR EXCEED THE CODE PRESCRIBED REQUIREMENTS FOR THIS INSTALLATION.

THIS BUILDING AS DESIGNED, RESTING ON A PROPERLY PREPARED GRANULAR SUB-BASE WILL BE SAFE AND STRUCTURALLY SOUND FOR VERTICAL AND LATERAL LOADS AS DISCUSSED ABOVE. A FULL DEPTH FOUNDATION WALL AT THE BUILDING PERIMETER AND AN ANCHORAGE SYSTEM, TYPICAL FOR OTHER TYPES OF BUILDING CONSTRUCTION, ARE NOT REQUIRED FOR THIS BUILDING.

THE "FOUNDATION" FOR THIS STRUCTURE IS ESSENTIALLY THE COMBINATION OF THE COMPACTED SUB-BASE MATERIAL AND THE BUILDING'S REINFORCED SLAB. THE COMBINATION OF THE COMPACTED SUB-BASE MATERIAL AND THE BUILDING'S REINFORCED SLAB NEED TO BE AT LEAST 12" THICK AND THE COMPACTED SUB-BASE MATERIAL SHALL EXTEND BELOW THE LOCAL FROST DEPTH

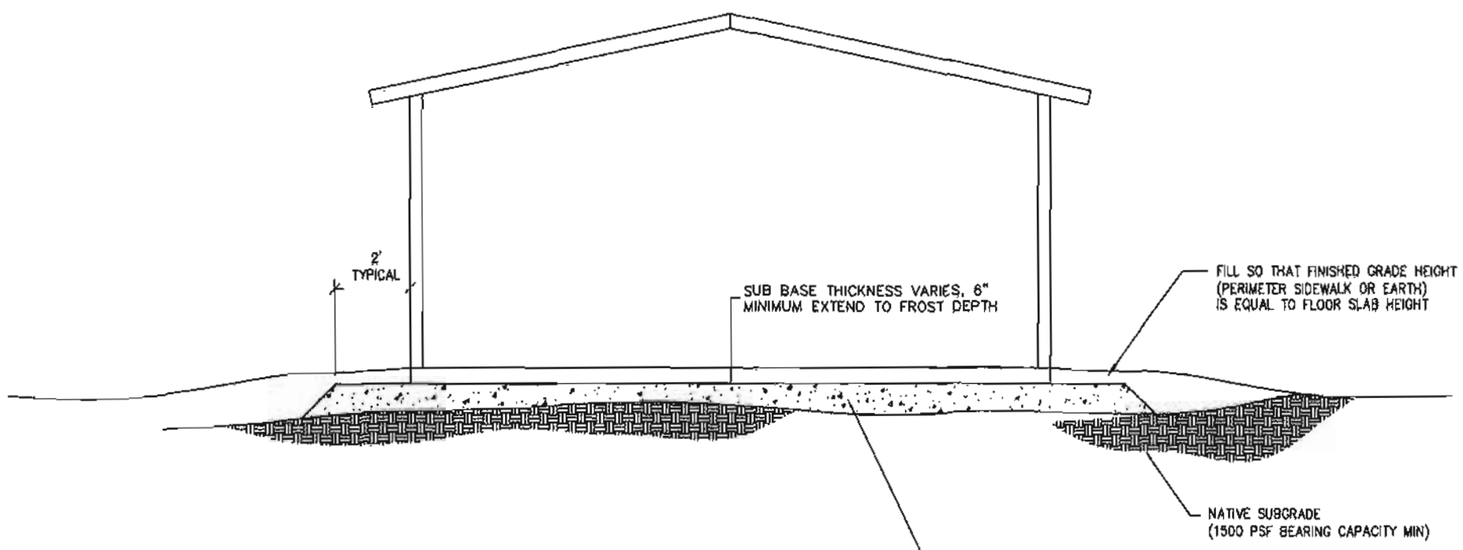

PRIOR TO PLACEMENT OF BUILDING A PROPERLY PREPARED SUB-BASE SHALL BE PROVIDED. SUB-BASE SHALL BE A MINIMUM OF 6" THICK AND CONSIST OF ¾" MINUS CRUSHED ROCK (ROAD BASE MATERIAL) COMPACTED TO 95% OF OPTIMUM DENSITY IN ACCORDANCE WITH ASTM D 1557. FINISHED SURFACE OF SUB-BASE SHALL BE FLAT AND LEVEL, WITH A MAXIMUM DEVIATION OF -½", +0" FROM A TRUE HORIZONTAL PLANE. REFER TO BUILDING HANDLING SHEET FOR SUB-BASE REQUIREMENTS DURING BUILDING PLACEMENT. (PREPARED SUB-BASE NOT BY CXT).

HEIDEN, WILLIAM RICHARD III
STATE OF WASHINGTON
39076
REGISTERED
PROFESSIONAL ENGINEER

EXPIRES April 23, 2019

September 5, 2017

3608 N. Sullivan Bldg. #7 Spokane, WA 99216

CXT

Precast Products

901 N. Highway 77 Hillsboro, TX 76645

PROJECT TITLE

CORTEZ SECTIONAL

BUILDING NUMBER CRS-039

NOTICE

The information contained herein is proprietary and the exclusive property of CXT Incorporated. The information may only be used by the original recipient for the purpose intended. Reproduction or distribution of this information is strictly prohibited without the prior written consent of CXT Incorporated. By allowing use of this information, CXT Incorporated grants no warranty, express or implied, including a warranty of merchantability or of fitness for a particular purpose.

CXT Incorporated

REV	DESCRIPTION	APPROVED	DATE

SCALE	1/4"=1'-0"	DATE	08-03-17
DRAWN	DANA B	FILE NO.	CRS-039
CHECKED	RDW	SHEET	48

FOUNDATION DETAIL

DWG NO.	SHEET	REV.
CRS-22	22 / 28	

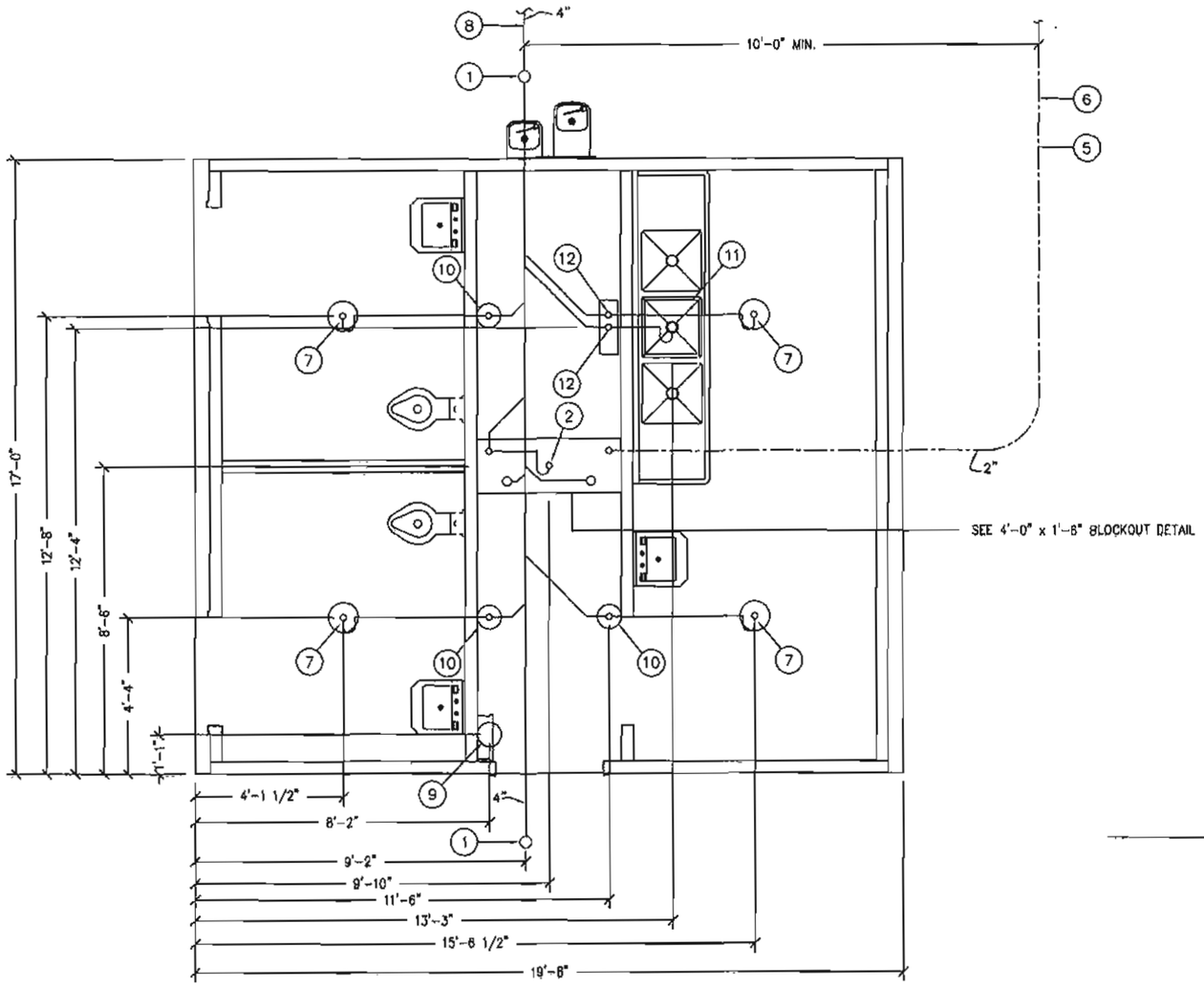

FLOOR DRAIN BLOCKOUTS & BELOW FLOOR PIPING

ALL PIPING INDICATED ON THIS SHEET IS NOT BY CXT

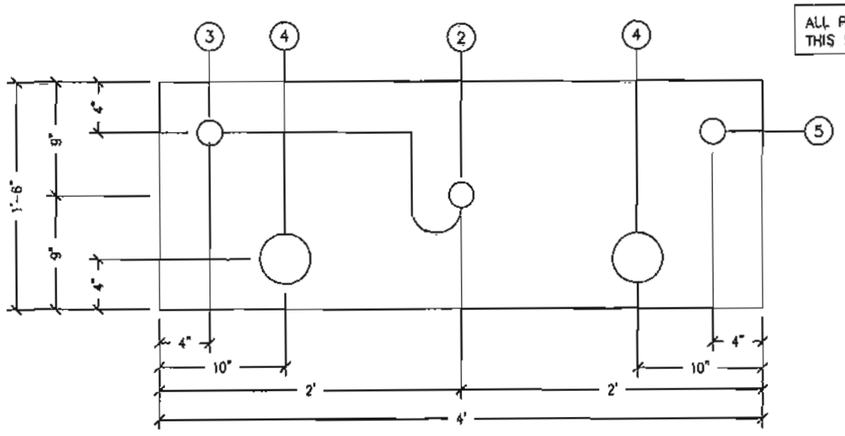

4'-0" x 1'-6" BLOCKOUT DETAIL

BELOW FLOOR PIPING – KEY NOTES

1. 4" CLEAN OUT TO GRADE.
2. 2" FLOOR DRAIN. FIELD INSTALLED TRAP PRIMER SYSTEM IF REQUIRED BY AUTHORITY HAVING JURISDICTION. (4'-0" x 1'-6" BLOCKOUT)
3. 2" VENT PIPES EXTENDED 12" ABOVE FINISHED FLOOR LEVEL, PROVIDE TEST PLUG. (4'-0" x 1'-6" BLOCKOUT)
4. 3" WASTE PIPE EXTENDED 12" ABOVE FINISHED FLOOR LEVEL, PROVIDE TEST PLUG. (4'-0" x 1'-6" BLOCKOUT)
5. 2" TYPE K ANNEALED "SOFT" COPPER WATER SERVICE EXTENDED 12" ABOVE FINISHED FLOOR LEVEL, PROVIDE CAP AT END. (4'-0" x 1'-6" BLOCKOUT)
6. MIN. BURY PER LOCAL REQUIREMENTS TO PROTECT 2" FLOOR DRAIN. FIELD INSTALLED TRAP PRIMER SYSTEM IF REQUIRED BY AUTHORITY HAVING JURISDICTION. (10" DIA BLOCKOUT)
7. 2" FLOOR DRAIN. FIELD INSTALLED TRAP PRIMER SYSTEM IF REQUIRED BY AUTHORITY HAVING JURISDICTION. BACKWATER VALVES ON DRAINS (NOT BY CXT) (10" DIA BLOCKOUT)
8. 30" MIN. BURY, PROVIDE TRACER TAPE.
9. ELECTRICAL STUB UP. (8" DIA BLOCKOUT)
10. 2" VENT PIPES EXTENDED 12" ABOVE FINISHED FLOOR LEVEL, PROVIDE TEST PLUG. (8" DIA BLOCKOUT)
11. 2" FLOOR SINK (1'-6"x1'-6" BLOCKOUT)(FLOOR SINK IS FIELD INSTALLED NOT BY CXT).
12. 2" VENT PIPES EXTENDED 12" ABOVE FINISHED FLOOR LEVEL, PROVIDE TEST PLUGS (6"x1'-6" BLOCKOUT).

PIPING LEGEND

BELOW FLOOR WASTE PIPING SCH 40 ABS TYPE DWV	BELOW FLOOR VENT PIPING SCH 40 ABS TYPE DWV	2" TYPE "K" ANNEALED "SOFT" COPPER WATER SERVICE

FLOOR DRAIN DETAIL NOTES

A. CAST-IN DRAIN HOUSING (10" INSIDE DIM – PROVIDED BY CXT)
B. FIELD INSTALLED GROUT, SLOPE TO DRAIN (CXT PROVIDED-INSTALLATION NOT BY CXT)
C. 2" WASTE PIPE – STUB UP 12" ABOVE GRADE (NOT BY CXT)
D. TAPPED P-TRAP ADAPTER (NOT BY CXT)
E. P-TRAP ASSEMBLY (NOT BY CXT)
F. 1/2" O.D. COPPER TRAP PRIMER LINE (NOT BY CXT)
G. 2" FLOOR DRAIN VENT RISER – STUB UP 12" ABOVE GRADE (NOT BY CXT)
H. TRAP PRIMER MANIFOLD (PRE-PLUMBED AND INSTALLED BY CXT)
I. 1/2" SHUT OFF VALVE (PRE-PLUMBED AND INSTALLED BY CXT)

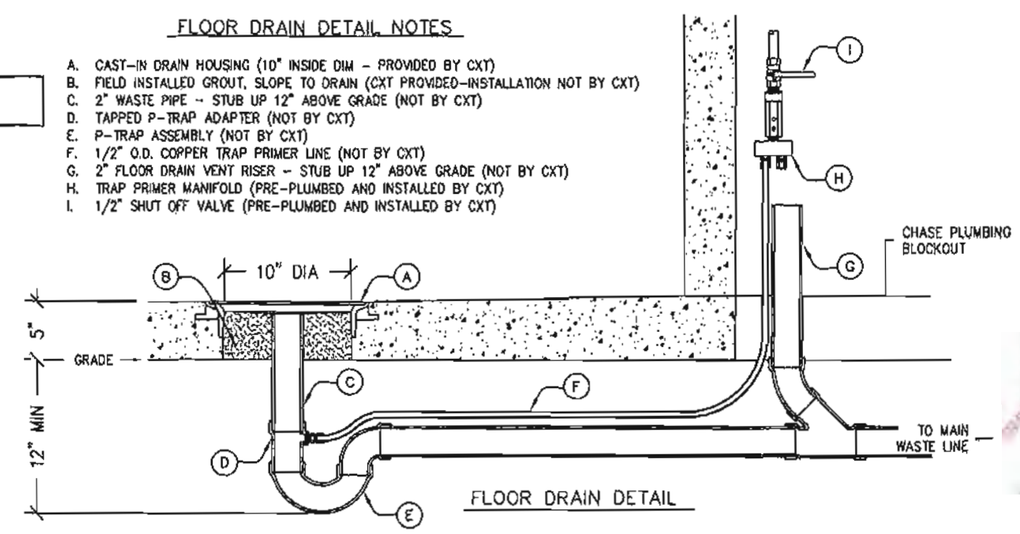

FLOOR DRAIN DETAIL

EXPIRES April 23, 2019

September 5, 2017

3808 N. Sullivan Bldg. #7 Spokane, WA 99216

CXT Precast Products

901 N. Highway 77 Hillsboro, TX 76645

PROJECT TITLE

CORTEZ SECTIONAL

BUILDING NUMBER CRS-039

NOTICE

The information contained herein is proprietary and the exclusive property of CXT Incorporated. The information may only be used by the original recipient for the purpose intended. Reproduction or distribution of this information is strictly prohibited without the prior written consent of CXT Incorporated. By allowing use of this information, CXT Incorporated grants no warranty, express or implied, including a warranty of merchantability or of fitness for a particular purpose.

CXT Incorporated

NO.	DESCRIPTION	REVISED	DATE

SCALE	1/4"=1'-0"	DATE	09-05-17
DRAWN	DONA B.	FILE NO.	CRS-039
CHECKED	RDW	PLOT	

FIELD STUB UP LOCATIONS

DWG NO.	SHEET	REV.
CRS-23	23 / 28	

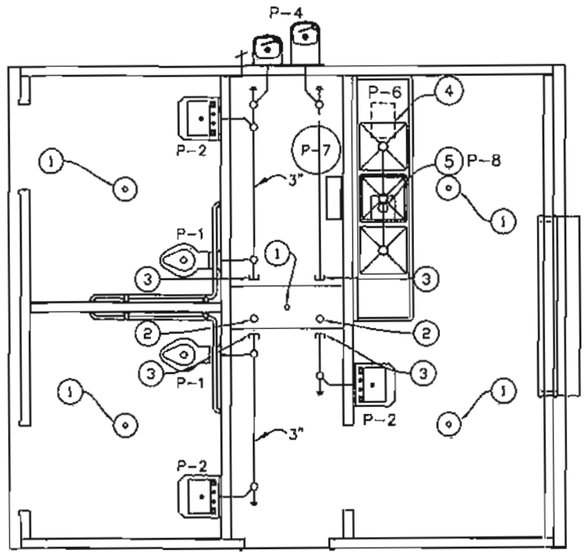

WASTE PIPING

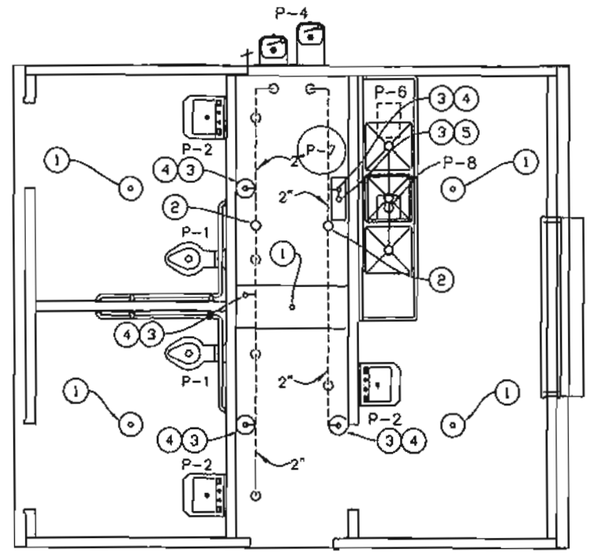

VENT PIPING

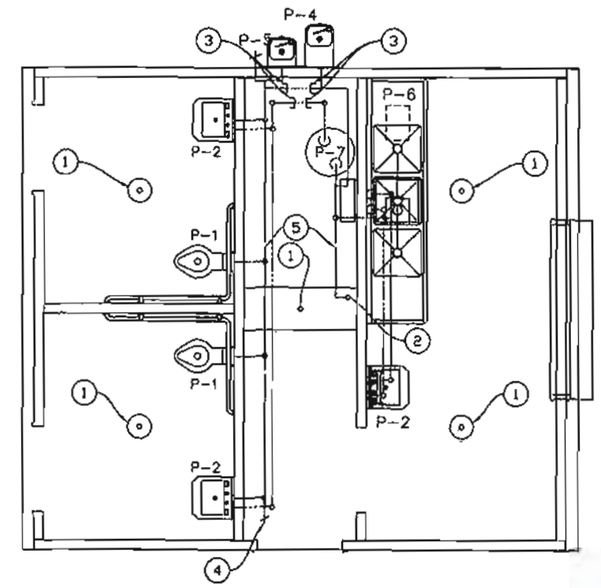

WATER PIPING

WASTE PIPING - KEY NOTES

1. 2" FLOOR DRAIN, FIELD INSTALLED (NOT BY CXT)
2. 3" WASTE THROUGH FLOOR, FIELD INSTALLED (NOT BY CXT)
3. PROVIDE TEST PLUG IN END OF WASTE PIPE. CONTINUATION OF PIPING IS FIELD INSTALLED & NOT BY CXT.
4. FIELD INSTALLED GREASE TRAP IF REQUIRED BY AUTHORITY HAVING JURISDICTION (NOT BY CXT).
5. 1 1/2" INDIRECT WASTE TO FLOOR SINK, LOCATED IN BO (FLOOR SINK IS FIELD INSTALLED NOT BY CXT).

VENT PIPING - KEY NOTES

1. 2" FLOOR DRAIN, FIELD INSTALLED (NOT BY CXT)
2. 4" VENT THROUGH ROOF.
3. 2" VENT WITH TEST PLUG.
4. FIELD INSTALLED 2" VENT PIPING FROM FLOOR DRAINS. (NOT BY CXT)
5. FIELD INSTALLED 2" VENT PIPING FROM FLOOR SINK P-5. (NOT BY CXT)

WATER PIPING - KEY NOTES

1. 2" FLOOR DRAIN, FIELD INSTALLED (NOT BY CXT)
2. FIELD INSTALLED 2" WATER SUPPLY WITH SHUT-OFF VALVE NEAR FLOOR. (NOT BY CXT)
3. CAPPED CW/HW LINE. CONNECTION BETWEEN SIDES IS TO BE FIELD INSTALLED. (NOT BY CXT)
4. 3/4" HOSE BIBB WITH VACUUM BREAKER AND WHEEL HANDLE.
5. WATER PIPING ALONG WALL, SEE DIAGRAM ON CRS-25.
6. WATER HEATER WITH SIESMIC BRACING
7. HOT WATER PIPING AT CEILING, INSTALL TO MISS LIGHT FIXTURE. INSULATE WITH 1" PRE MOLDED PIPE INSULATION.

PIPING LEGEND

- COLD WATER
- HOT WATER
- VENT PIPING SCH 40 ABS TYPE DWV
- WASTE PIPE: ABS ASTM D2661, SCHED. 40
- FIELD PIPING (NOT BY CXT)

HEIDEN, WILLIAM RICHARD III
STATE OF WASHINGTON
39076
REGISTERED
PROFESSIONAL ENGINEER
EXPIRES April 23, 2019
September 5, 2017

3808 N. Sullivan Bldg. #7 Spokane, WA 99216
CXT
Precast Products
901 N. Highway 77 Hillsboro, TX 76645

PROJECT TITLE
CORTEZ SECTIONAL
BUILDING NUMBER CRS-039

NOTICE
The information contained herein is proprietary and the exclusive property of CXT Incorporated. The information may only be used by the original recipient for the purpose intended. Reproduction or distribution of this information is strictly prohibited without the prior written consent of CXT Incorporated. By allowing use of this information, CXT Incorporated grants no warranty, express or implied, including a warranty of merchantability or of fitness for a particular purpose.
CXT Incorporated

NO.	DESCRIPTION	APPROVED	DATE

SCALE	3/16"=1'-0"	DATE	08-18-17
DRAWN	DAGA B	FILE NO.	CRS-039
CHECKED	RRW	PLOT	84

WATER, WASTE & VENT PIPING PLANS AND NOTES

DWG NO.	SHEET	REV.
CRS-24	24 / 28	

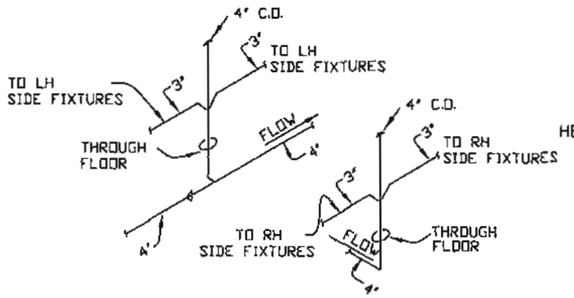

DETAIL OF FIELD INSTALLED WASTE CONNECTION

NTS

NOTE:
INSULATE HW PIPING WITH 1" (R3.6)
PRE-MOLDED PIPE INSULATION WITH ASJ

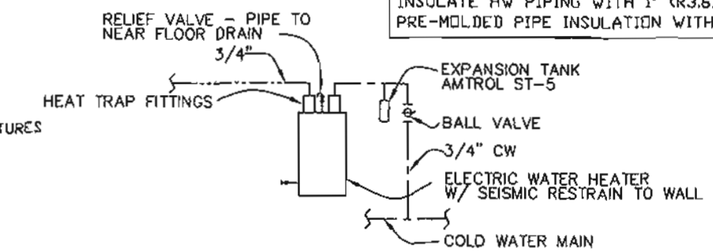

HOT WATER PIPING RISER DIAGRAM NTS

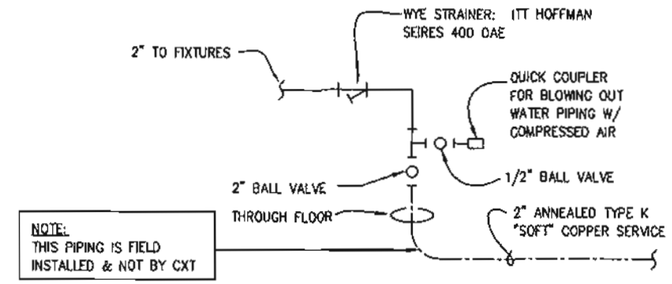

NOTE:
THIS PIPING IS FIELD INSTALLED & NOT BY CXT

WATER SERVICE DETAIL

NTS

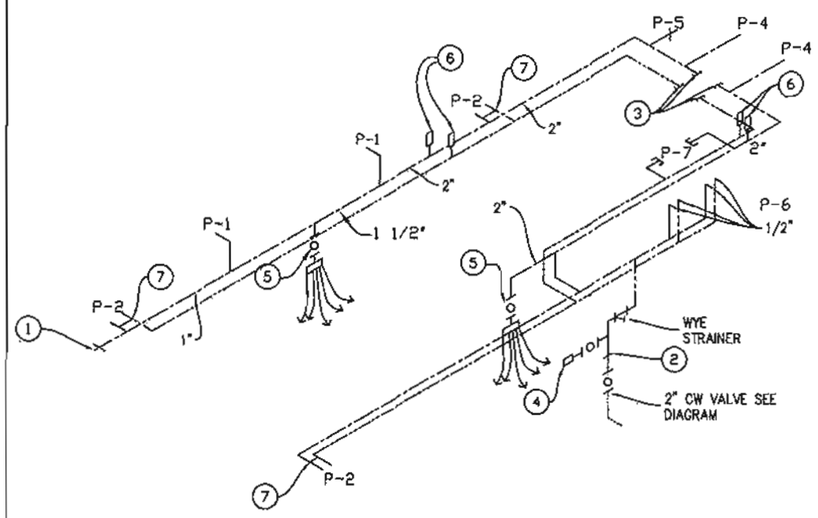

WATER PIPING RISER DIAGRAM

SPECIAL NOTES:

1. TOTAL FIXTURE COUNT (INCLUDES FLOOR DRAINS) = (22)
2. FLOWING PRESSURE: 45 PSI MIN, 80 PSI MAX
3. TOTAL DEVELOPED LENGTH = 35'-0"*

*APPROXIMATE DISTANCE FROM THE SOURCE TO THE FARTHEST FIXTURE

PIPING LEGEND

- COLD WATER
- HOT WATER
- VENT PIPING SCH 40 ABS TYPE DWV
- WASTE PIPE: SCH 40 ABS, ASTM D2661, TYPE DWV
- FIELD PIPING (NOT BY CXT)

KEY NOTES

1. 3/4" HOSE BIBB WITH VACUUM BREAKER. & WHEEL HANDLE
2. TO THIS POINT BY CXT.
3. 2" PLUGGED CW LINE TO THIS POINT, BY CXT. 2" CW BETWEEN THESE POINTS, NOT BY CXT.
4. 1/2" AIR QUICK CONNECTION W/ BALL VALVE FOR BLOWING OUT WATER PIPING.
5. 1/2" BALL VALVE & CAPPED CW LINE FOR FIELD INSTALLED TRAP PRIMER VALVE IF REQUIRED BY JURISDICTION HAVING AUTHORITY
6. WATER HAMMER ARRESTOR
7. ASSE 1070 WATER TEMPERATURE LIMITNG DEVICE

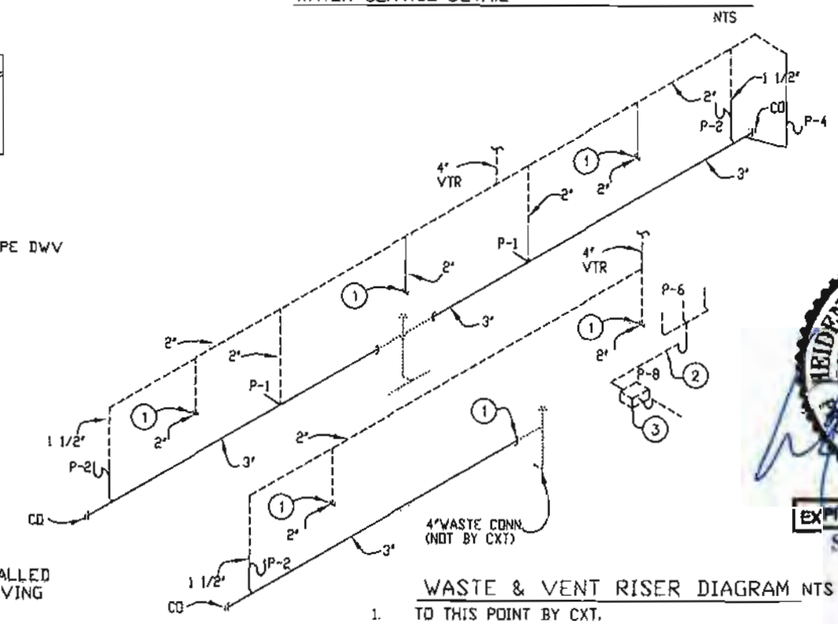

WASTE & VENT RISER DIAGRAM NTS

1. TO THIS POINT BY CXT.
2. 1-1/2" INDIRECT WASTE TO FLOOR SINK. (FLOOR SINK IS FIELD INSTALLED - NOT BY CXT.)
3. FIELD INSTALLED GREASE TRAP IF REQUIRED BY AUTHORITY HAVING JURISDICTION (NOT BY CXT).

PLUMBING FIXTURE SCHEDULE

SYM	DESCRIPTION	MANUFACTURER	CXT PART NUMBER	QTY	HW	CW	WASTE	VENT	SUPPLIES / NOTES
P-1	WATER CLOSET	WILLOUGHBY IND	ETW-1490-HET-DF	2	-	1-1/4"	3"	2"	SLOAN "ROYAL" #952-1.6 L-3 W=4", SLOAN HY-33A
P-2	LAVATORY	WILLOUGHBY IND	ES-1015-HC-1-TE	3	1/2"	1/2"	1-1/2"	1-1/2"	HAMMER ARRESTOR (2), YMMONS S-71, SLOAN HY-33A INSULATE WATER SUPPLY AND DRAIN PIPE UNDER LAVATORY
P-3	FLOOR DRAIN	TRAVIS	54960-CXT	4			2"	2"	TRAP PRIMER- MIFAB MM500, DISTR UNIT- MIFAB
		SIOUX CHIEF	840-2A	1					
P-4	DRINKING FOUNTAIN W/ BARRIER BARS	HAWS	1119FR, SK1 CANE SKIRT	1		(2) 1/2"	(2) 1-1/2"	(2) 1-1/2"	DUAL HEIGHT COMBINATION, SHIPPED LOOSE, FIELD INSTALL
P-5	EXTERIOR HOSE BIB	WOODFORD	B65	1		3/4"			
P-6	THREE COMPARTMENT SINK	SSP INC	3C20x20-2-20 CHICAGO FAUCETS 445-0J18 OR EQUAL (1 TOTAL) 1/2x17 GA.CP; BRASSWORKS "SPEEDWAY" #ST-1912-K;	1	(2) 1/2"	(2) 1/2"	2"	2"	PIPE WASTE TO GREASE TRAP (IF REQUIRED BY JURISDICTION) THEN TO FLOOR SINK W/ 2" AIR GAP.
P-7	WATER HEATER	AO SMITH	DEL 30 4500 240V	1	3/4"	3/4"			30 GALLON, ELECTRIC TANK TYPE, 240 VOLTS, ONE PHASE.
P-8	FLOOR SINK	-	12" x 12" (NOT BY CXT)	1	-	-	2"	2"	FLOOR SINK FIELD INSTALLED (NOT BY CXT)

HEIDEN, WILLIAM RICHARD III
STATE OF WASHINGTON
39076
REGISTERED PROFESSIONAL ENGINEER

EXPIRES April 23, 2019
September 5, 2017

3806 N. Sullivan Bldg. #7 Spokane, WA 99216
CXT
Precast Products
901 N. Highway 77 Hillsboro, TX 76645

PROJECT TITLE
CORTEZ SECTIONAL
BUILDING NUMBER CRS-039

NOTICE
The information contained herein is proprietary and the exclusive property of CXT Incorporated. The information may only be used by the original recipient for the purpose intended. Reproduction or distribution of this information is strictly prohibited without the prior written consent of CXT Incorporated. By allowing use of this information, CXT Incorporated grants no warranty, express or implied, including a warranty of merchantability or of fitness for a particular purpose.
CXT Incorporated

REV.	REVISION	DATE

SCALE	3/16"=1'-0"	DATE	8-28-17
DRAWN	DANA B	FILE NO.	CRS-039
CHECKED	ROW	BLDG.	64

PLUMBING SCHEDULE
DIAGRAMS & NOTES

DWG NO.	SHEET	REV.
CRS-25	25 / 28	

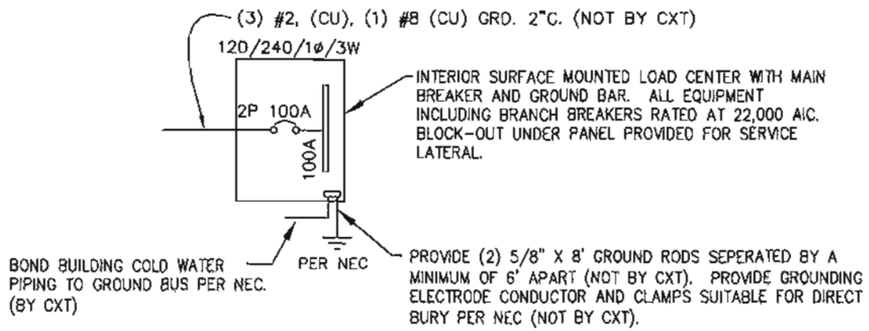

ONE-LINE POWER DIAGRAM

NTS

PANEL SCHEDULE

AMP 100
SURFACE MOUNT

PANEL
120/240V, 1P, 3W

TOTAL CONNECTED VA LOAD 8,120
TOTAL CALCULATED VA LOAD 9,267

CIRCUIT NO.	DESCRIPTION	OCP	LOAD TYPE	(VA)	(A)	PH	CIRCUIT NO.	DESCRIPTION	OCP	LOAD TYPE	(VA)	(A)
1	CHASE LIGHTS	1P/20A	N	56	0.5	A	2	CHASE OUTLETS	1P/20A	R	180	1.5
3	EXTERIOR LIGHTS	1P/20A	C	70	0.6	B	4	CONCESSION LIGHTS & FAN	1P/20A	L	157	1.3
5	RESTROOM LIGHTS & FAN	1P/20A	N	157	1.3	A	6	CONCESSION OUTLETS	1P/20A	R	720	6.0
7	HOT WATER TANK	1P/20A	C	2,250	18.8	B	8	RESTROOM #2 HAND DRYER	1P/20A	N	1,140	9.5
9		1P/20A	C	2,250	18.8	A	10					
11	RESTROOM #1 HAND DRYER	1P/20A	N	1,140	9.5	B	12					
13						A	14					
15						B	16					
17						A	18					
19						B	20					

NOTE: MAXIMUM ALLOWABLE AIC IS 22K AMPS, PANEL MODIFICATIONS WILL BE REQUIRED (NOT BY CXT) IF TRANSFORMER CAPACITY EXCEEDS 175 KVA.

LOAD	CONNECTED	CALCULATED
(C)ONTINUOUS	4,570 X 1.25	5,713 VA
(R)EC (1ST 10KVA)	900 X 1.00	900 VA
(N)ON-CONTINUOUS	2,493 X 1.00	2,493 VA
(L)ARGEST MOTOR	157 X 1.25	161 VA
TOTAL LOAD	8,120 VA	9,267 VA 38.6 AMPS

GENERAL NOTES

1. RECESSED JUNCTION BOXES FOR SINGLE DEVICES SHALL HAVE SINGLE GANG MUD RINGS CAST IN CONCRETE WALLS.
2. ALL RECEPTACLES SHALL BE GFCI PROTECTED BY CIRCUIT BREAKERS, OR BY OTHER GFCI RECEPTACLES.
3. ALL CONDUIT SHALL BE SIZED PER NEC. (SEE REF TABLE) EXPOSED CONDUIT SHALL BE EMT/FMC, RECESSED SHALL BE PVC.

WIRE SIZE	1/2" EMT	3/4" EMT
14	TYPE THHN 12 MAX	TYPE THHN 22 MAX
12	TYPE THHN 9 MAX	TYPE THHN 16 MAX
10	TYPE THHN 5 MAX	TYPE THHN 10 MAX

WIRE SIZE	1/2" ENT	3/4" ENT
14	TYPE THHN 10 MAX	TYPE THHN 18 MAX
12	TYPE THHN 7 MAX	TYPE THHN 13 MAX
10	TYPE THHN 4 MAX	TYPE THHN 8 MAX

WIRE SIZE	1/2" FMC	3/4" FMC
14	TYPE THHN 13 MAX	TYPE THHN 22 MAX
12	TYPE THHN 9 MAX	TYPE THHN 16 MAX
10	TYPE THHN 6 MAX	TYPE THHN 10 MAX

4. INSTALL ALL WIRING IN CONDUIT OR RELATED ENCLOSURES.
5. ALL ELECTRICAL INSTALLATIONS SHALL MEET THE 2017 VERSION OF THE NATIONAL ELECTRICAL CODE.
6. MINIMUM WIRE SIZE SHALL BE #12 AWG COPPER, THHN INSULATION UNLESS NOTED OTHERWISE.
7. ROUTE ALL CONDUITS IN UTILITY ROOM AT CEILING OR FACE OF WALLS.
8. ELECTRICAL DRAWINGS ARE DIAGRAMMATIC IN NATURE & MAY NOT SHOW EXACT LOCATIONS OF DEVICES. REFER TO WALL PANEL & OTHER DRAWINGS FOR EXACT LOCATIONS OF J-BOXES, ETC.
9. PROVIDE 2 POLE 30A DISCONNECT FOR WATER HEATER. WATER HEATER CIRCUIT TO BE #10 AWG.
10. PROVIDE A CIRCUIT BREAKER LOCK OUT FOR EACH HAND DRYER
11. ALL CONDUCTORS AND CABLES MUST BE PROPERLY TERMINATED IN APPROVED BOXES, BEFORE CONNECTING THE CIRCUIT TO THE BREAKER AND BEFORE RECEIVING FINAL INSPECTION APPROVAL IN THE FACTORY.

LIGHTING FIXTURE SCHEDULE

FIXTURE NUMBER	VOLTAGE	WATTS	DESCRIPTION
A	120	28	LUMINAIRE VPF84 INTERIOR LIGHT FIXTURE, VPF8-4-28W HP-4000K-120-CP-WHT-WET-OCC-TX/SD SURFACE MOUNTED, LED LAMP 4 FT, WRAP AROUND LENS, LOW TEMPERATURE DRIVER, BUILT IN OCCUPANCY SENSOR ACTIVATED W/ ADDITIONAL OCCUPANCY SENSOR FOR FAN CONTROL
B	120	14	SWOOP 810 LED EXTERIOR LIGHT, YWP810-14W HP-3500K-120-CP-BRZ-CAB/PC EXTERIOR, VANDAL RESISTANT, WALL MOUNTED, 14 WATT, CLEAR PRISMATIC LENS, BUILT IN PHOTOELECTRIC CONTROL
C	120	28	LUMINAIRE VPF84 INTERIOR LIGHT FIXTURE, VPF8-4-28W HP-4000K-120-CP-WHT-WET-OCC-TX/SD SURFACE MOUNTED, LED LAMP 4 FT, WRAP AROUND LENS, LOW TEMPERATURE DRIVER, BUILT IN OCCUPANCY SENSOR ACTIVATED W/ ADDITIONAL OCCUPANCY SENSOR FOR FAN CONTROL WITH WALL SWITCH OVERRIDE

NOTE : THE SOURCE OF EFFICACY OF EXTERIOR LIGHTING IS TO BE A MINIMUM OF 45 LUMENS PER WATT.

EXHAUST FAN SCHEDULE

SYM	MFR	MODEL #	CFM	SONES	VOLTS	AMPS	NTS.
EF-1	FANTECH	RVF-4XL	180	6.0	120	0.84	1,2,3,4

NOTE
1. WITH SPEED CONTROL MOUNTED IN CHASE.
2. FANS LISTED FOR WET LOCATION, CONTROL VIA OCCUPANCY SENSOR. LOCATE OPEN FACE J-BOX ON EXTERIOR SIDE OF PANEL.
3. BATHROOM EXHAUST FAN SPEED CONTROL SET BETWEEN 140 AND 210 CFM
3. CAFETERIA EXHAUST FAN SPEED CONTROL SET BETWEEN 102 AND 153 CFM

EXPIRES April 23, 2019
September 5, 2017

3808 N. Sullivan Bldg. #7 Spokane, WA 99216
CXT
Precast Products
901 N. Highway 77 Hillsboro, TX 76645

PROJECT TITLE
CORTEZ SECTIONAL
BUILDING NUMBER CRS-039

NOTICE
The information contained herein is proprietary and the exclusive property of CXT Incorporated. The information may only be used by the original recipient for the purpose intended. Reproduction or distribution of the information is strictly prohibited without the prior written consent of CXT Incorporated. By allowing use of this information, CXT Incorporated grants no warranty, express or implied, including a warranty of merchantability or of fitness for a particular purpose.
CXT Incorporated

REV.	DESCRIPTION	APPROVAL	DATE

SCALE	3/8"=1'-0"	DATE	06-29-17
DRAWN	GMA B	FILE NO.	16-039
CHECKED	RDW	PLOT	

ELECTRICAL NOTES & SCHEDULES

DWG NO.	SHEET	REV.
CRS-26	26 / 28	

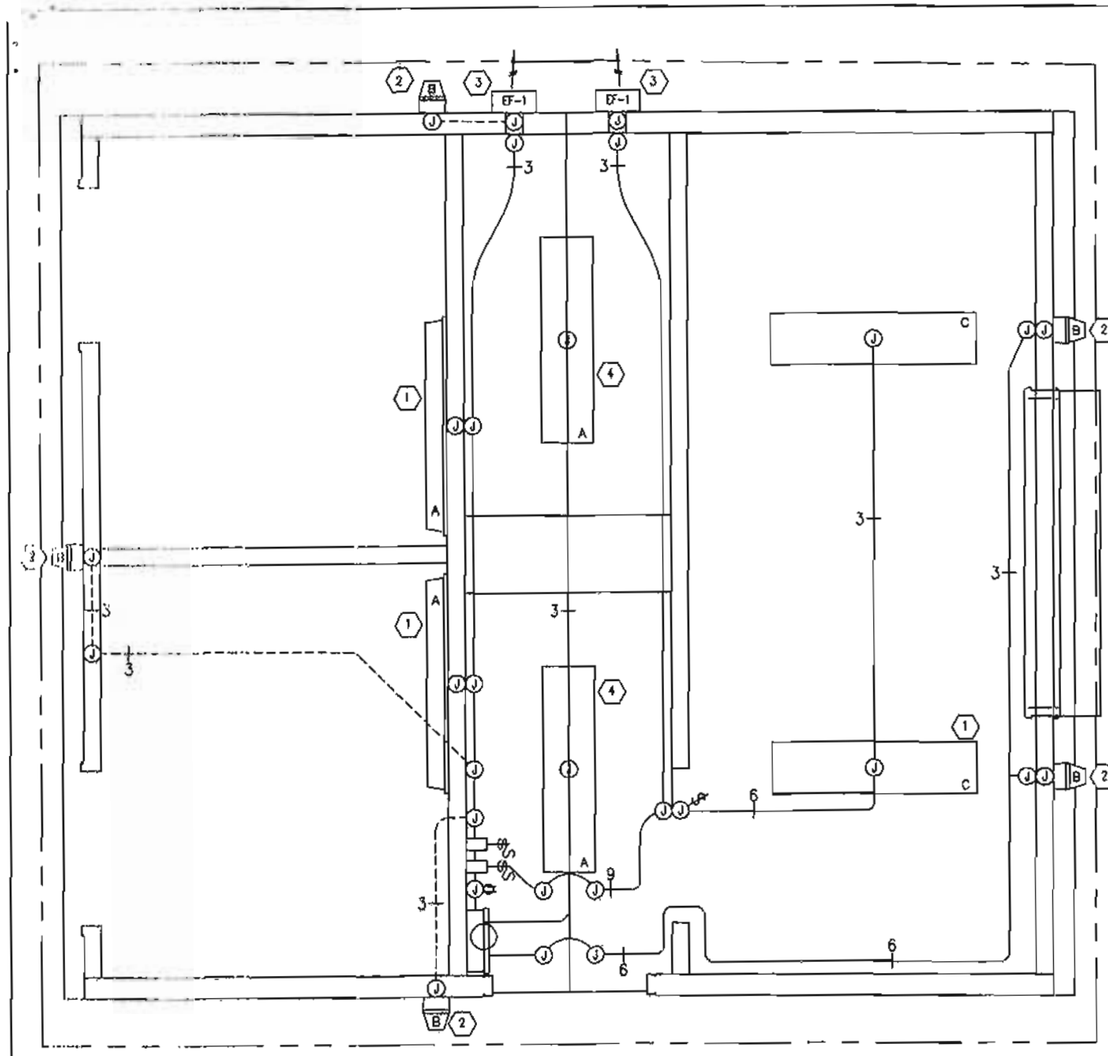

LIGHTING / EXHAUST FAN PLAN

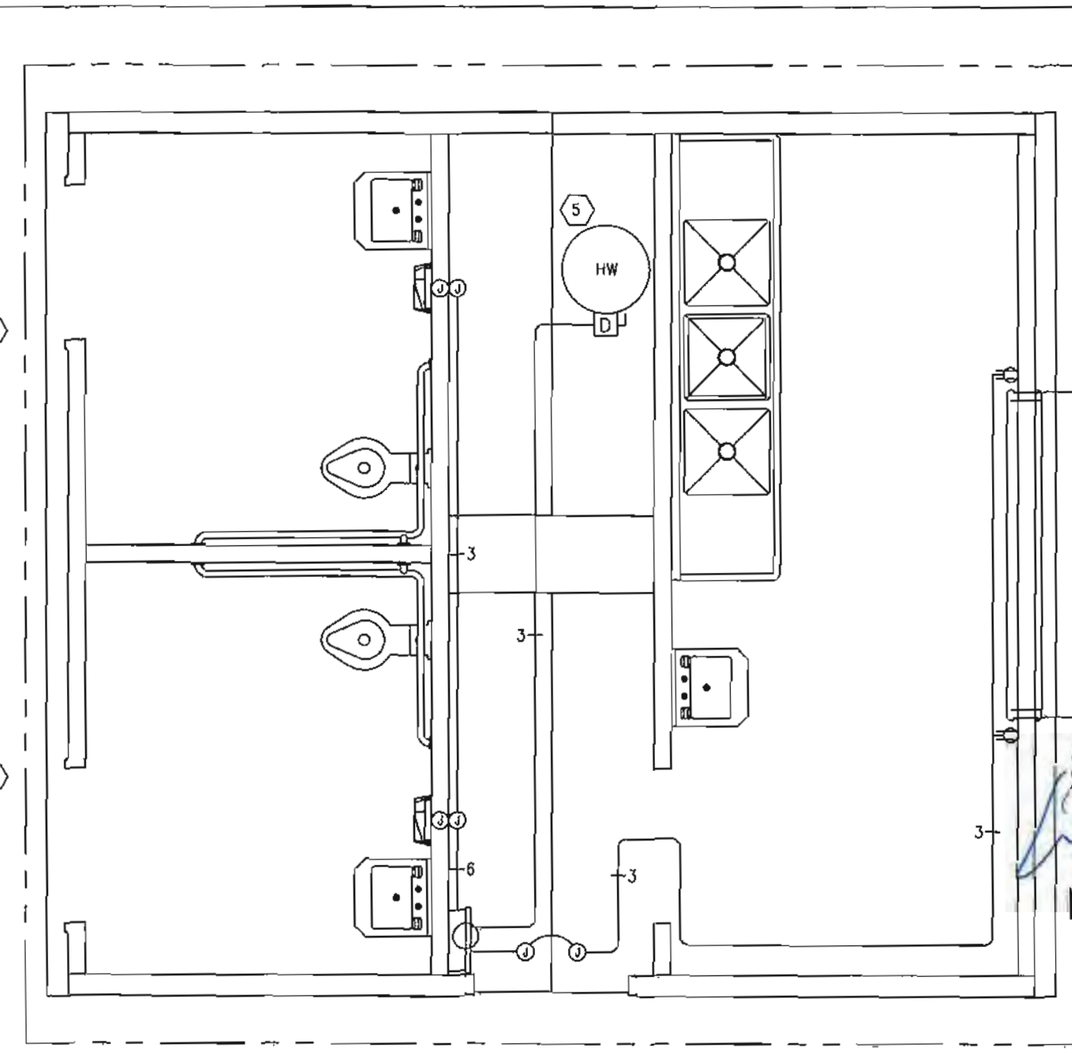

HOT WATER, HAND DRYER & OUTLETS PLAN

KEY NOTES

1. OCCUPANCY SENSOR CONTROLLED LIGHTS. EXHAUST FANS TO COME ON WITH RESTROOM LIGHTS.
2. LIGHT FIXTURE TO BE CONTROLLED BY PHOTOCELL LOCATED INSIDE FIXTURE. ROUTE WIRING IN CONCEALED CONDUIT.
3. CIRCUIT AS NEEDED FOR THE LOAD OF THE EXHAUST FAN. WIRE THRU SPEED SWITCH (IN CHASE) AND OCCUPANCY SENSOR ISOLATED CONTACT. PROVIDE RIGID DUCTING TO EACH RESTROOM.
4. CHASE LIGHTS ARE MOTION ACTIVATED.
5. CIRCUIT AS NEEDED FOR LOAD OF ELECTRIC WATER HEATER. INSTALL PER MANUFACTURER RECOMMENDATIONS.

SYMBOLS LEGEND

- NOTE REFERENCE
- A / C — FLUORESCENT FIXTURE
- B — LIGHT FIXTURE
- COMBINATION SWITCH & DUPLEX
- LOAD CENTER/PANEL-C
- J — JUNCTION BOX
- EF-1 — EXHAUST FAN
- 3 — SURFACE MOUNTED CONDUIT NUMBER DENOTES WIRES, (ALL #12AWG UNO) ALWAYS ONE WIRE TO BE GROUND WIRE
- SURFACE MOUNTED CONDUIT
- CONCEALED CONDUIT
- S — FAN SPEED CONTROL
- HAND DRYER
- D — SAFETY DISCONNECT

MEIDEN, WILLIAM RICHARD III
STATE OF WASHINGTON
39076
REGISTERED
PROFESSIONAL ENGINEER

EXPIRES April 23, 2019

September 5, 2017

3508 N. Sullivan Bldg. #7 Spokane, WA 99216

CXT
Precast Products
901 N. Highway 77 Hillsboro, TX 76645

PROJECT TITLE
CORTEZ SECTIONAL
BUILDING NUMBER CRS-039

NOTICE
The information contained herein is proprietary and the exclusive property of CXT Incorporated. The information may only be used by the original recipient for the purpose intended. Reproduction or distribution of this information is strictly prohibited without the prior written consent of CXT Incorporated. By allowing use of this information, CXT Incorporated makes no warranty, express or implied, including a warranty of merchantability or of fitness for a particular purpose.
CXT Hillsboro, Oregon

SCALE	3/8"=1'-0"	DATE	
DRAWN	CMA B	FILE NO.	CRS-039
CHECKED	RDW	PLS	32

ELECTRICAL PLAN, LEGEND & NOTES

DWG NO. CRS-27 | SHEET 27/28 | REV.

WALL PANEL W1

EMBEDDED MATERIALS

ITEM	QTY
AS-2	4
PS-2	10
PS-19	2
R411	2
FL-648	2
R311	1
R320	4
R3x83	8
R3x94	6
R3x192	2
R3x92	2
ROUND MUD RING	1
4x4 J-BOX	1
40 1/8" x 82 1/4" BO	2
SI-2 MOLD	2
BLOCKOUT 3"x6"x2" DP	1

CU. FT. CONC.	SQ. FT. W.W.F.
28.9 (1.07)	90

APPROXIMATE WEIGHT
4,335

WALL PANEL W2

EMBEDDED MATERIALS

ITEM	QTY
AS-2	4
PS-2	10
PS-19	2
R411	2
R311	1
R320	4
R3x83	6
R3x192	2
FL-648	2
BLOCKOUT 4 1/2" DIA	2
W.C. WALL SLEEVE	2
BLOCKOUT 3" DIA	2
BLOCKOUT 1 1/2" DIA	2
ROUND MUD RING	2
4x4 E-BOX	8
BLOCKOUT 2" DIA	2
RECTANGULAR MUD RING	2

CU. FT. CONC.	SQ. FT. W.W.F.
44.2 (1.64)	132

APPROXIMATE WEIGHT
6,630

WALL PANEL W3

EMBEDDED MATERIALS

ITEM	QTY
AS-2	3
PS-2	1
PS-10	2
PS-19	4
R303	2
R320	8
R3x82	4
R3x109	4
R3x48	2
R3x38	2
R322	2
4x4 E-BOX	2
BLOCKOUT 4 1/2" DIA	1
MS-4 BLOCKOUT	1
MS-2 BLOCKOUT	1
HOSE BIB B.O.	1
BLOCKOUT 3 1/2" DIA	1

CU. FT. CONC.	SQ. FT. W.W.F.
22.0 (0.93)	68

APPROXIMATE WEIGHT
3,300

WALL PANEL W4

EMBEDDED MATERIALS

ITEM	QTY
AS-2	3
PS-2	2
PS-10	2
PS-19	4
R3x109	2
R320	8
R3x82	6
R3x48	2
R3x38	2
R322	2
R3x90	2
BLOCKOUT 3"x6"x2" DP	1
4x4 J-BOX	1
ROUND MUD RING	1
MS-2 BLOCKOUT	1
MS-4 BLOCKOUT	1

CU. FT. CONC.	SQ. FT. W.W.F.
18.2 (0.67)	56

APPROXIMATE WEIGHT
2,730

WALL PANEL W5

EMBEDDED MATERIALS

ITEM	QTY
AS-2	2
PS-2	4
PS-10	2
R320	8
R3x104	4
R3x78	4

CU. FT. CONC.	SQ. FT. W.W.F.
20.2 (0.75)	60

APPROXIMATE WEIGHT
3,030

WALL PANEL W6

EMBEDDED MATERIALS

ITEM	QTY
AS-2	4
PS-2	10
R3x90	2
R411	2
R311	1
R320	2
R3x83	6
R3x144	4
FL-648	2
BLOCKOUT 4 1/2" DIA	2
BLOCKOUT 3" DIA	1
BLOCKOUT 8" SQ	2
BLOCKOUT 1 1/2" DIA	1

CU. FT. CONC.	SQ. FT. W.W.F.
37.4 (1.38)	132

APPROXIMATE WEIGHT
5,602

WALL PANEL W7

EMBEDDED MATERIALS

ITEM	QTY
AS-2	4
PS-2	10
PS-19	2
R411	2
FL-648	2
R311	1
R320	4
R3x192	2
R3x162	2
R3x83	4
R3x92	8
ROUND MUD RING	2
4x4 E-BOX	4
6040 FRAME	1

CU. FT. CONC.	SQ. FT. W.W.F.
36.2 (1.34)	132

APPROXIMATE WEIGHT
5,426

WALL PANEL W8

EMBEDDED MATERIALS

ITEM	QTY
AS-2	3
PS-2	1
PS-10	2
PS-19	4
R303	2
R320	8
R3x82	4
R3x109	4
R3x48	2
R3x38	2
R322	2
4x4 E-BOX	2
BLOCKOUT 4 1/2" DIA	1
MS-4 BLOCKOUT	1
MS-2 BLOCKOUT	1
BLOCKOUT 3 1/2" DIA	1
4x4 J-BOX	1
ROUND MUD RING	1

CU. FT. CONC.	SQ. FT. W.W.F.
22.0 (0.82)	68

APPROXIMATE WEIGHT
3,330

WALL PANEL W9

EMBEDDED MATERIALS

ITEM	QTY
AS-2	3
PS-2	2
PS-10	2
PS-19	4
R3x109	2
R320	8
R3x82	6
R3x48	2
R3x38	2
R322	2
R3x90	2
MS-2 BLOCKOUT	1
MS-4 BLOCKOUT	1

CU. FT. CONC.	SQ. FT. W.W.F.
18.2 (0.67)	56

APPROXIMATE WEIGHT
2,730

FLOOR SLAB F1

EMBEDDED MATERIALS

ITEM	QTY
AS-3	4
PS-19	16
R303	10
R320	16
R3x90	2
R3x114	8
R3x200	10
R3x42	8
R411	4
FL-648	4
RM54960 F.D.	2
BLOCKOUT 18"x24"	1
BLOCKOUT 8" DIA	3
PT CHUCK	2
1" PVC SCHED40 x 9'-5"	2

CU. FT. CONC.	SQ. FT. W.W.F.
67.7 (2.51)	328

APPROXIMATE WEIGHT
10,155

FLOOR SLAB F2

EMBEDDED MATERIALS

ITEM	QTY
AS-3	4
PS-19	14
R303	8
R320	16
R3x90	2
R3x114	8
R3x200	10
R3x42	6
R411	4
FL-648	4
RM54960 F.D.	2
BLOCKOUT 18"x24"	1
BLOCKOUT 8" DIA	1
PT CHUCK	2
1" PVC SCHED40 x 9'-5"	2
R3x85	2
BLOCKOUT 6"x18"	1
R3x36	6
BLOCKOUT 18"x18"	1
R3x58	2

CU. FT. CONC.	SQ. FT. W.W.F.
68.3 (2.53)	328

APPROXIMATE WEIGHT
10,245

ROOF SLAB R1

EMBEDDED MATERIALS

ITEM	QTY
FL-648	2
FL-847	4
PS-19	11
R303	11
R320	8
R3x112	2
R3x119	4
BLOCKOUT 5" DIA	1
R411	2
R4x18	16
R4x112	5
1" PVC SCHED40 x 9'-10"	1
PT CHUCK	1
R4x114	4
MS-12	1

CU. FT. CONC.	SQ. FT. W.W.F.
37.8 (1.40)	100

APPROXIMATE WEIGHT
5,670

ROOF SLAB R2

EMBEDDED MATERIALS

ITEM	QTY
FL-648	2
FL-847	4
PS-19	11
R303	11
R320	8
R3x112	2
R3x119	4
BLOCKOUT 3"x3"x9"	2
R411	2
R4x18	16
R4x112	5
1" PVC SCHED40 x 9'-10"	1
PT CHUCK	1
4x4 J-BOX	2
MS-12	1
R4x114	4

CU. FT. CONC.	SQ. FT. W.W.F.
37.8 (1.40)	100

APPROXIMATE WEIGHT
5,670

ROOF SLAB R3

EMBEDDED MATERIALS

ITEM	QTY
PT CHUCK	1
FL-847	4
PS-19	9
R303	9
R320	8
R3x112	2
R3x119	4
BLOCKOUT 5" DIA	1
PS-10	4
R4x18	16
R4x112	1
1" PVC SCHED40 x 9'-10"	1

CU. FT. CONC.	SQ. FT. W.W.F.
39.4 (1.46)	100

APPROXIMATE WEIGHT
5,910

ROOF SLAB R4

EMBEDDED MATERIALS

ITEM	QTY
PT CHUCK	1
FL-847	4
PS-19	9
R303	9
R320	8
R3x112	2
R3x119	4
1" PVC SCHED40 x 9'-10"	1
PS-10	4
R4x18	16
R4x112	1

CU. FT. CONC.	SQ. FT. W.W.F.
39.4 (1.46)	100

APPROXIMATE WEIGHT
5,910

HEIDEN, WILLIAM RICHARD III
STATE OF WASHINGTON
39076
REGISTERED
PROFESSIONAL ENGINEER

EXPIRES April 23, 2019

September 5, 2017

3808 N. Sullivan Bldg. #7 Spokane, WA 99216

CXT

Precast Products

901 N. Highway 77 Hillsboro, TX 76645

PROJECT TITLE
CORTEZ SECTIONAL
BUILDING NUMBER CRS-039

NOTICE

The information contained herein is proprietary and the exclusive property of CXT Incorporated. The information may only be used by the original recipient for the purpose intended. Reproduction or distribution of this information is strictly prohibited without the prior written consent of CXT Incorporated. By allowing use of this information, CXT Incorporated grants no warranty, express or implied, including a warranty of merchantability or of fitness for a particular purpose.

CXT Incorporated

NO.	DESCRIPTION	APPROVED	DATE

SCALE	3/8"=1'-0"	DATE	08-24-17
DRAWN	DANA B	FILE NO.	CRS-039
CHECKED	BRW	PLOT	32

MATERIAL LIST

DWG NO.	SHEET	REV.
CRS-28	28 / 28	

EM-1

INDEX	Index of Drawings
AS-2	EMBED DETAIL
AS-3	EMBED DETAIL
MS2-01	WALL VENT
MS2-02	VENT FRAME ASSEMBLY
MS2-02SS	VENT FRAME ASSEMBLY

EM-2

MS2-03	VENT SCREEN ASSEMBLY
MS2-03SS	VENT SCREEN ASSEMBLY
MS2-04	OPTIONAL VENT COVER PLATE
MS4-01	RECTANGULAR WINDOW FRAME
MS4-02	WINDOW FRAME ASSEMBLY
MS4-03	LEXAN WINDOW DETAIL

EM-3

MS4-04	WINDOW RETAINER ASSEMBLY
MS12-01	SKYLIGHT
MS12-02	SKYLIGHT FRAME ASSEMBLY
MS12-03	SKYLIGHT RETAINER ASSEMBLY
PS-1	EMBED DETAIL
PS-2	EMBED DETAIL

EM-4

PS-10	EMBED DETAIL
PS-19	EMBED DETAIL
R303	FORMED REBAR
R311	FORMED REBAR
R320	FORMED REBAR
R322	FORMED REBAR

EM-5

R411	FORMED REBAR
SI2-M	SIGN EMBED
SI2-W	SIGN EMBED
V1	GRAB BAR
V4	VERTICAL GRAB BAR

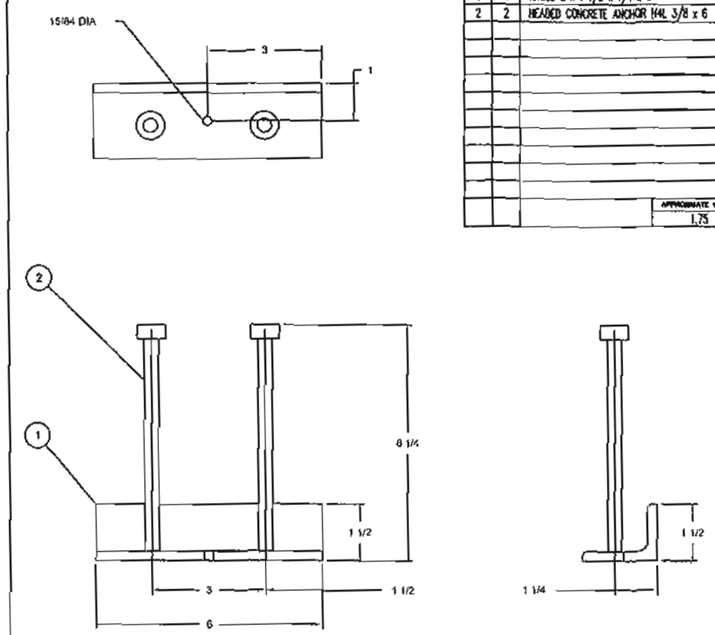

BILL OF MATERIALS		
ITEM	QTY	DESCRIPTION
1	1	ANGLE 2 x 1 1/2 x 1/4 x 8
2	2	HEADED CONCRETE ANCHOR HAL 3/8 x 6

APPROXIMATE WEIGHT: 1.75

1 AS-2 EMBED DETAIL
SCALE: 3" = 1'-0"

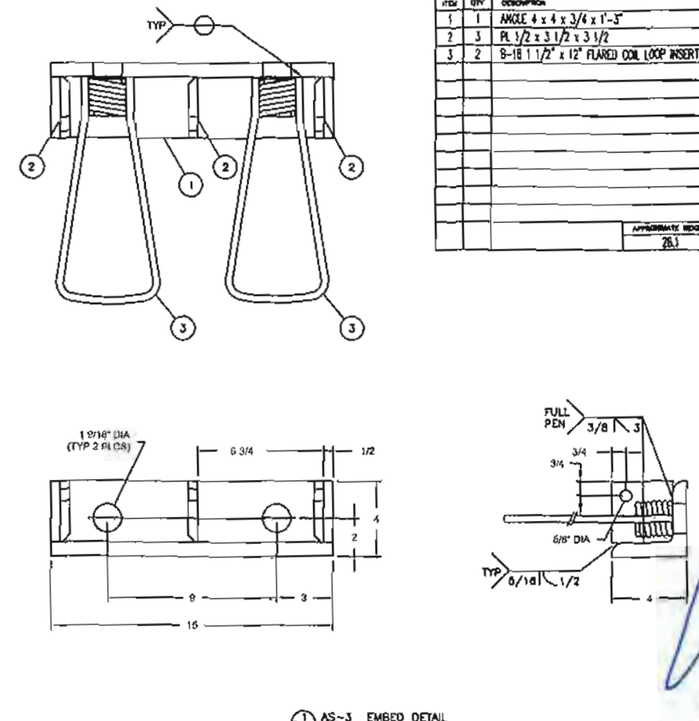

BILL OF MATERIALS		
ITEM	QTY	DESCRIPTION
1	1	ANGLE 4 x 4 x 3/4 x 1'-3"
2	3	PL 1/2 x 3 1/2 x 3 1/2
3	2	9-18 1 1/2" x 12" FLARED COIL LOOP INSERT

APPROXIMATE WEIGHT: 28.1

1 AS-3 EMBED DETAIL
SCALE: 1 1/2" = 1'-0"

HEIDEN, WILLIAM RICHARD III
STATE OF WASHINGTON
39076
REGISTERED
PROFESSIONAL ENGINEER

EXPIRES April 23, 2019

September 5, 2017

TOLERANCES U.N.O.

DECIMAL DIMENSION	± 0.01"
FRACTION DIMENSION	± 1/16"
HOLD DIMENSION	± 1/32"
ANGLES	± 1/2°
WELD STUD DIMENSION	± 1/4"

BILL OF MATERIALS		
ITEM	QTY	DESCRIPTION
1	1	VENT FRAME ASSEMBLY (MS2-02)
2	1	VENT LOUVER ASSEMBLY (FO-3079)
3	2	VENT SCREEN ASSEMBLY (MS2-03)
4	8	3/8-16NC x 3/4 BUTTON SS MACH. SCREW
5	1	OPTIONAL VENT COVER PLATE (MS2-04)

APPROXIMATE WEIGHT: 51.95

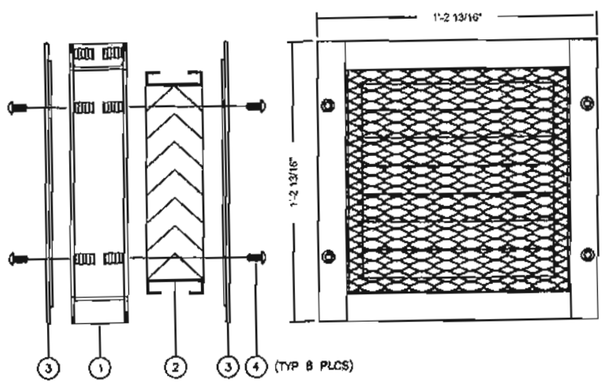

1 MS2-01 WALL VENT
SCALE: 1 1/2" = 1'-0"

TOLERANCES U.N.O.

DECIMAL DIMENSION	± 0.01"
FRACTION DIMENSION	± 1/16"
HOLD DIMENSION	± 1/32"
ANGLES	± 1/2°
WELD STUD DIMENSION	± 1/4"

NOTE:
1) ALL HOLE LOCATIONS ARE FOR REFERENCE ONLY. HOLES TO BE LOCATED BY APPROVED FIXTURE.

BILL OF MATERIALS		
ITEM	QTY	DESCRIPTION
1	2	CHANNEL C3 x 4.1# x 1'-2 13/16"
2	2	CHANNEL C3 x 4.1# x 1'-0"
3	8	3/8-16NC PLAIN FERRULE INSERT F43

APPROXIMATE WEIGHT: 18.50

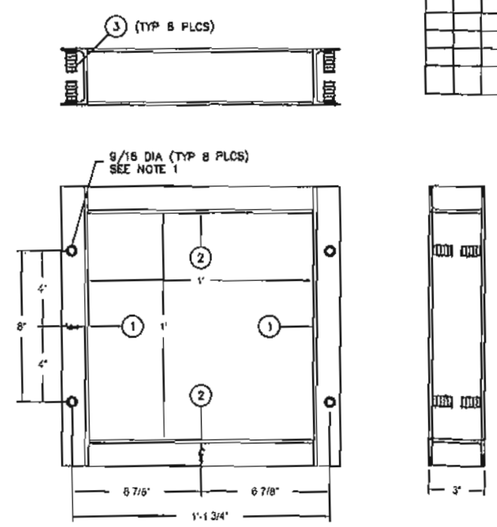

2 MS2-02 VENT FRAME ASSEMBLY
SCALE: 1 1/2" = 1'-0"

TOLERANCES U.N.O.

DECIMAL DIMENSION	± 0.01"
FRACTION DIMENSION	± 1/16"
HOLD DIMENSION	± 1/32"
ANGLES	± 1/2°
WELD STUD DIMENSION	± 1/4"

NOTE:
1) ALL HOLE LOCATIONS ARE FOR REFERENCE ONLY. HOLES TO BE LOCATED BY APPROVED FIXTURE.

BILL OF MATERIALS		
ITEM	QTY	DESCRIPTION
1	2	CHANNEL C3 x1 3/8x3/16 304SS x 1'-2 13/16"
2	2	CHANNEL C3x1 3/8x3/16 304SS x 1'-0"
3	8	3/8-16NC SS FERRULE INSERT F43

APPROXIMATE WEIGHT: 18.50

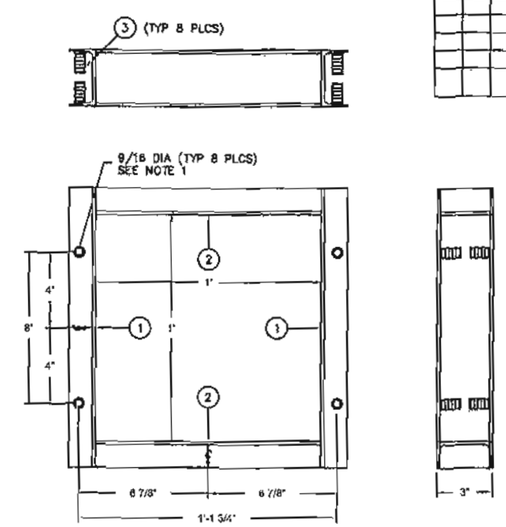

2 MS2-02SS VENT FRAME ASSEMBLY
SCALE: 1 1/2" = 1'-0"

3808 N. Sullivan Bldg. #7 Spokane, WA 99216

CXT Precast Products

901 N. Highway 77 Hillsboro, TX 76645

PROJECT TITLE
CORTEZ SECTIONAL
BUILDING NUMBER CRS-039

NOTICE

The information contained herein is proprietary and the exclusive property of CXT Incorporated. The information may only be used by the original recipient for the purpose intended. Reproduction or distribution of this information is strictly prohibited without the prior written consent of CXT Incorporated. By allowing use of this information, CXT Incorporated grants no warranty, express or implied, including a warranty of merchantability or of fitness for a particular purpose.

CXT Incorporated

REV.	DESCRIPTION	APPROVAL	DATE

SCALE	NTS	DATE	08/01/17
DRAWN	NATE POWER	FILE NO.	EM-1
CHECKED		PLOT	NTS

COMPILED EMBEDS

DWG NO.	SHEET	REV.
EM-1	1 / 6	A

TOLERANCES U.N.O.

DECIMAL DIMENSION	± 0.01"
FRACTION DIMENSION	± 1/16"
HOLD DIMENSION	± 1/32"
ANGLES	± 1/2°
WELD STUD DIMENSION	± 1/4"

NOTE:
1) ALL HOLE LOCATIONS ARE FOR REFERENCE ONLY. HOLES TO BE LOCATED BY APPROVED FIXTURE.

BILL OF MATERIALS

ITEM	QTY	DESCRIPTION
1	2	FLAT BAR 3/16 x 1 1/2HR x 14 7/8"
2	2	FLAT BAR 3/16 x 1 1/2HR x 11 3/4"
3	1	FLAT EXPANDED METAL 1/2 NO.13 x 13" x 13"

APPROXIMATE WEIGHT: 5.97

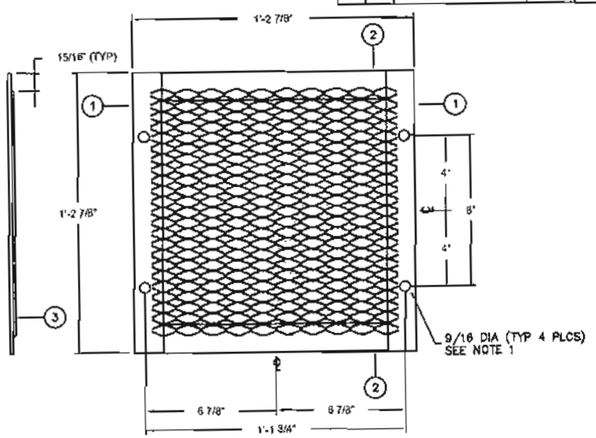

1/4 MS2-03 VENT SCREEN ASSEMBLY
SCALE: 1 1/2"=1'-0"

TOLERANCES U.N.O.

DECIMAL DIMENSION	± 0.01"
FRACTION DIMENSION	± 1/16"
HOLD DIMENSION	± 1/32"
ANGLES	± 1/2°
WELD STUD DIMENSION	± 1/4"

NOTE:
1) ALL HOLE LOCATIONS ARE FOR REFERENCE ONLY. HOLES TO BE LOCATED BY APPROVED FIXTURE.

BILL OF MATERIALS

ITEM	QTY	DESCRIPTION
1	2	FLAT BAR 3/16x1 1/2 304SS x 14 7/8"
2	2	FLAT BAR 3/16x1 1/2 304SS x 11 3/4"
3	1	F.E.M. 1/2 NO.13 304SS x 13" x 13"

APPROXIMATE WEIGHT: 5.97

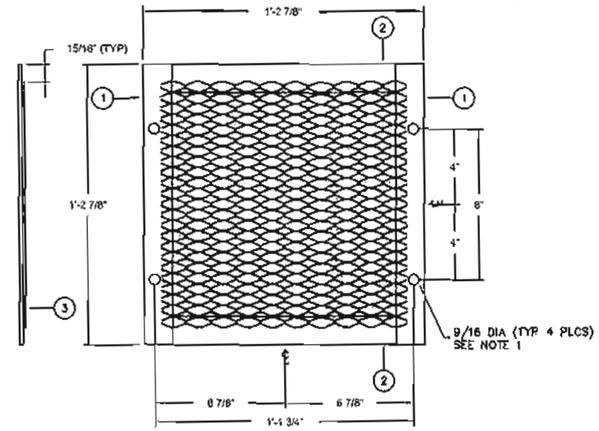

1/4 MS2-03SS VENT SCREEN ASSEMBLY
SCALE: 1 1/2"=1'-0"

TOLERANCES U.N.O.

DECIMAL DIMENSION	± 0.01"
FRACTION DIMENSION	± 1/16"
HOLD DIMENSION	± 1/32"
ANGLES	± 1/2°
WELD STUD DIMENSION	± 1/4"

NOTE:
1) ALL HOLE LOCATIONS ARE FOR REFERENCE ONLY. HOLES TO BE LOCATED BY APPROVED FIXTURE.

BILL OF MATERIALS

ITEM	QTY	DESCRIPTION
1	1	1/4" DIAMOND FLOOR PLATE 1'-3" x 1'-3"

APPROXIMATE WEIGHT: 17.58

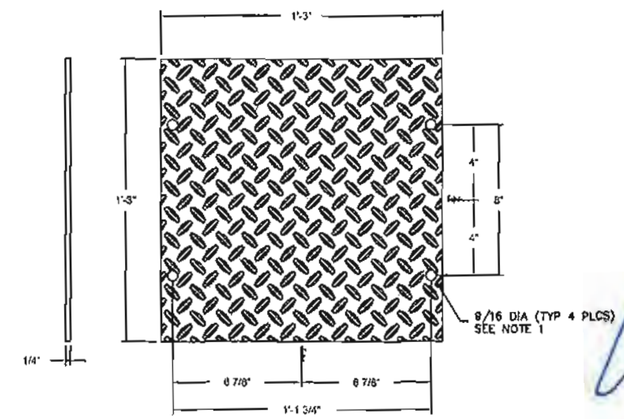

1/4 MS2-04 OPTIONAL VENT COVER PLATE
SCALE: 1 1/2"=1'-0"

HEIDEN, WILLIAM RICHARD III
STATE OF WASHINGTON
39076
REGISTERED
PROFESSIONAL ENGINEER
EXPIRES April 23, 2019
September 5, 2017

TOLERANCES U.N.O.

DECIMAL DIMENSION	± 0.01"
FRACTION DIMENSION	± 1/16"
HOLD DIMENSION	± 1/32"
ANGLES	± 1/2°
WELD STUD DIMENSION	± 1/4"

BILL OF MATERIALS

ITEM	QTY	DESCRIPTION
1	1	WINDOW FRAME ASSEMBLY (MS4-02)
2	1	LEXAN WINDOW DETAIL (MS4-03)
3	1	WINDOW RETAINER ASSEMBLY (MS4-04)
4	4	1/4-20 x 1 ONE WAY SCREW ZINC PLATED
5	4	1/4-20 ALUMINUM BREAK-AWAY NUT

APPROXIMATE WEIGHT: 19.48

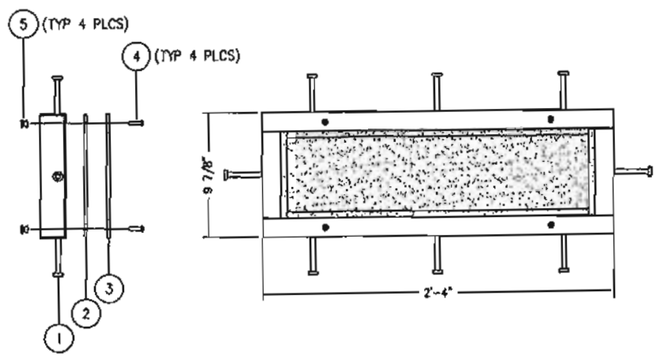

1/4 MS4-01 RECTANGULAR WINDOW FRAME
SCALE: 1"=1'-0"

TOLERANCES U.N.O.

DECIMAL DIMENSION	± 0.01"
FRACTION DIMENSION	± 1/16"
HOLD DIMENSION	± 1/32"
ANGLES	± 1/2°
WELD STUD DIMENSION	± 1/4"

NOTE:
1) ALL HOLE LOCATIONS ARE FOR REFERENCE ONLY. HOLES TO BE LOCATED BY APPROVED FIXTURE.

BILL OF MATERIALS

ITEM	QTY	DESCRIPTION
1	2	ANGLE 2 x 2 x 1/8 x 2'-3 7/8"
2	2	ANGLE 2 x 2 x 1/8 x 9 3/8"
3	8	HEADED CONCRETE ANCHOR HAL 3/8 x 3

APPROXIMATE WEIGHT: 11.00

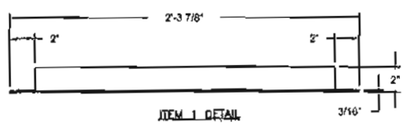

ITEM 1 DETAIL

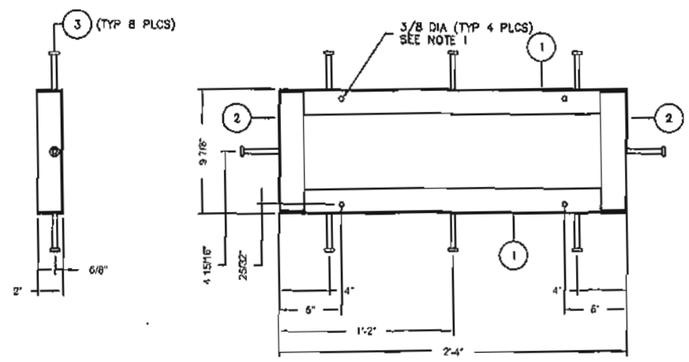

1/4 MS4-02 WINDOW FRAME ASSEMBLY
SCALE: 1"=1'-0"

TOLERANCES U.N.O.

DECIMAL DIMENSION	± 0.01"
FRACTION DIMENSION	± 1/16"
HOLD DIMENSION	± 1/32"
ANGLES	± 1/2°
WELD STUD DIMENSION	± 1/4"

NOTE:
1) ALL HOLE LOCATIONS ARE FOR REFERENCE ONLY. HOLES TO BE LOCATED BY APPROVED FIXTURE.

BILL OF MATERIALS

ITEM	QTY	DESCRIPTION
1	1	LEXAN 3/16 x 9 9/16" x 2'-3 13/16"

APPROXIMATE WEIGHT: 1.12

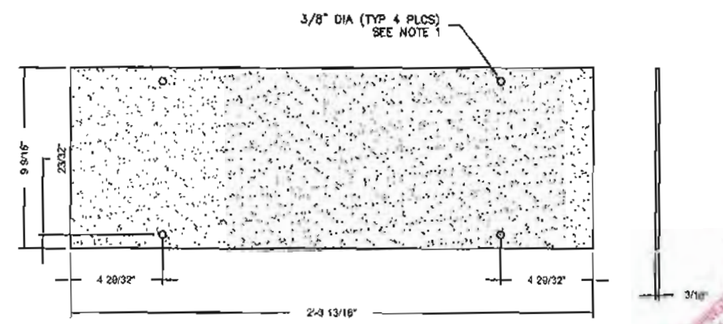

1/4 MS4-03 LEXAN WINDOW DETAIL
SCALE: 1 1/2"=1'-0"

3808 N. Sullivan Bldg. #7 Spokane, WA 99216
CXT
Precast Products
901 N. Highway 77 Hillsboro, TX 76645

PROJECT TITLE
CORTEZ SECTIONAL
BUILDING NUMBER CRS-039

NOTICE
The information contained herein is proprietary and the exclusive property of CXT Incorporated. The information may only be used by the original recipient for the purpose intended. Reproduction or distribution of this information is strictly prohibited without the prior written consent of CXT Incorporated. By allowing use of this information, CXT Incorporated grants no warranty, express or implied, including a warranty of merchantability or of fitness for a particular purpose.
CXT Incorporated

NO.	DESCRIPTION	APPROVED	DATE

SCALE	NTS	DATE	09/01/17
DRAWN	NATE PENNER	FILE NO.	EM-2
CHECKED		PLOT	NTS

COMPILED EMBEDS

DWG NO.	SHEET	REV.
EM-2	2 / 5	A

TOLERANCES U.N.O.

DECIMAL DIMENSION	± 0.01"
FRACTION DIMENSION	± 1/16"
HOLD DIMENSION	± 1/32"
ANGLES	± 1/2°
WELD STUD DIMENSION	± 1/4"

NOTE:
1) ALL HOLE LOCATIONS ARE FOR REFERECE ONLY. HOLES TO BE LOCATED BY APPROVED FIXTURE.

BILL OF MATERIALS

ITEM	QTY	DESCRIPTION
1	2	FLAT BAR 3/16 x 1 1/2HR x 2'-4"
2	2	FLAT BAR 3/16 x 1 1/2HR x 5 7/8"

APPROXIMATE WEIGHT: 7.35

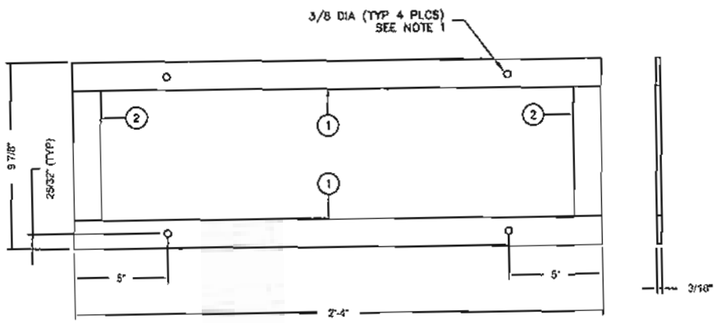

4/4 MS4-04 WINDOW RETAINER ASSEMBLY
SCALE: 1 1/2"=1'-0"

TOLERANCES U.N.O.

DECIMAL DIMENSION	± 0.01"
FRACTION DIMENSION	± 1/16"
HOLD DIMENSION	± 1/32"
ANGLES	± 1/2°
WELD STUD DIMENSION	± 1/4"

BILL OF MATERIALS

ITEM	QTY	DESCRIPTION
1	1	SKYLIGHT FRAME ASSEMBLY (MS12-02)
2	1	SKYLIGHT RETAINER ASSEMBLY (MS12-03)
3	1	TAMLITE 24240DPC SKYLIGHT WINDOW
3A	1	TAMLITE 24240LCP-716 SKYLIGHT WINDOW
		FOR INSULATED @ SNOW LOAD OF 300#
4	4	#14 HWH 1 1/2" SS SELF THREADING

APPROXIMATE WEIGHT: 103

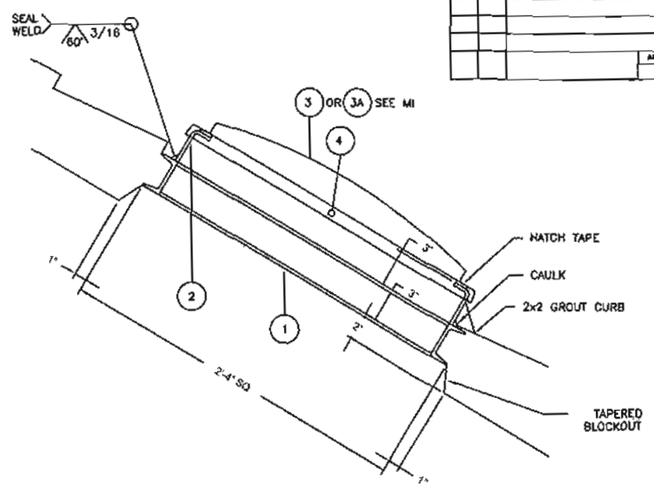

1/1 MS12-01 SKYLIGHT
SCALE: 1"=1'-0"

TOLERANCES U.N.O.

DECIMAL DIMENSION	± 0.01"
FRACTION DIMENSION	± 1/16"
HOLD DIMENSION	± 1/32"
ANGLES	± 1/2°
WELD STUD DIMENSION	± 1/4"

BILL OF MATERIALS

ITEM	QTY	DESCRIPTION
1	4	1/4x1 1/2x3" FORMED PLATE

APPROXIMATE WEIGHT: 54

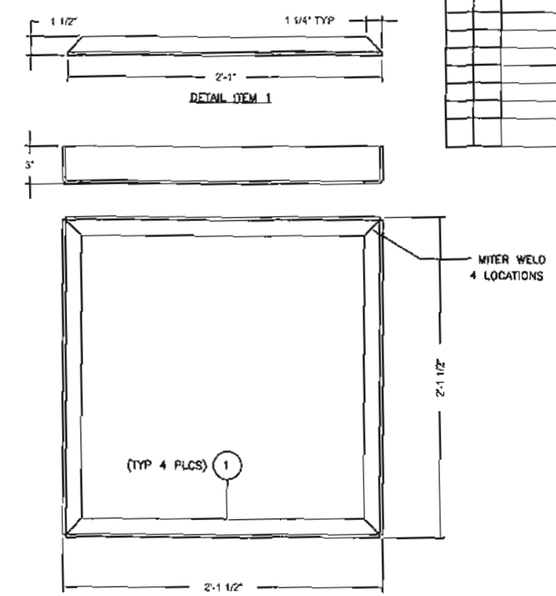

2/3 MS12-02 SKYLIGHT FRAME ASSEMBLY
SCALE: 1"=1'-0"

HEIDEN, WILLIAM RICHARD III
STATE OF WASHINGTON
39076
REGISTERED
PROFESSIONAL ENGINEER
EXPIRES April 23, 2019
September 5, 2017

TOLERANCES U.N.O.

DECIMAL DIMENSION	± 0.01"
FRACTION DIMENSION	± 1/16"
HOLD DIMENSION	± 1/32"
ANGLES	± 1/2°
WELD STUD DIMENSION	± 1/4"

BILL OF MATERIALS

ITEM	QTY	DESCRIPTION
1	2	C3x4.1x2'-1"
2	2	C3x4.1x2'-3 3/4"

APPROXIMATE WEIGHT: 35

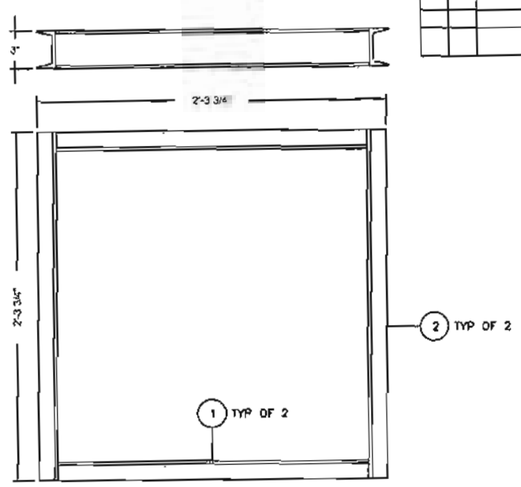

3/3 MS12-03 SKYLIGHT RETAINER ASSEMBLY
SCALE: 1"=1'-0"

BILL OF MATERIALS

ITEM	QTY	DESCRIPTION
1	1	FLAT BAR 3/8 x 3 HR x 6
2	2	HEADED CONCRETE ANCHOR RAIL 3/8 x 6

APPROXIMATE WEIGHT: 1.25

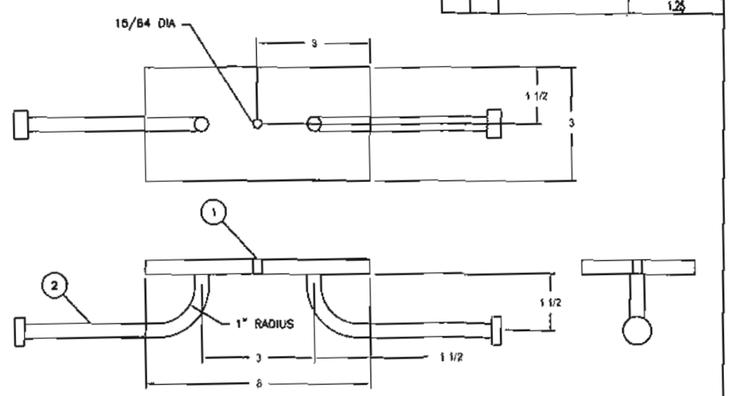

1/1 PS-1 EMBED DETAIL
SCALE: 3"=1'-0"

BILL OF MATERIALS

ITEM	QTY	DESCRIPTION
1	1	FLAT BAR 3/8 x 3 HR x 6
2	2	HEADED CONCRETE ANCHOR RAIL 3/8 x 6

APPROXIMATE WEIGHT: 1.25

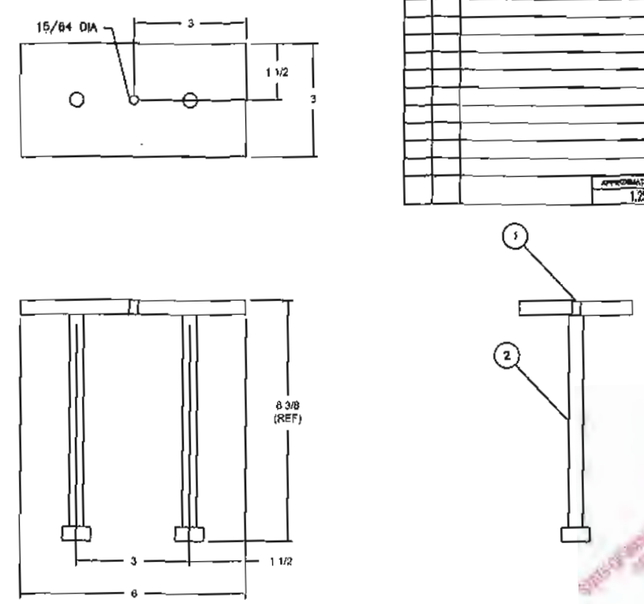

1/1 PS-2 EMBED DETAIL
SCALE: 3"=1'-0"

3808 N. Sullivan Bldg. #7 Spokane, WA 99216
CXT Precast Products
901 N. Highway 77 Hillsboro, TX 76645

PROJECT TITLE
CORTEZ SECTIONAL
BUILDING NUMBER CRS-039

NOTICE
The information contained herein is proprietary and the exclusive property of CXT Incorporated. The information may only be used by the original recipient for the purpose intended. Reproduction or distribution of this information is strictly prohibited without the prior written consent of CXT Incorporated. By making use of this information, CXT Incorporated makes no warranty, express or implied, including a warranty of merchantability or of fitness for a particular purpose.
CXT Incorporated

REV.	DESCRIPTION	BY	DATE

SCALE:	NTS	DATE:	09/01/17
DRAWN	NATE PO	FILE NO.	EM-3
CHECKED			NTS

COMPILED EMBEDS

DWG NO.	SHEET	REV.
EM-3	3 / 5	A

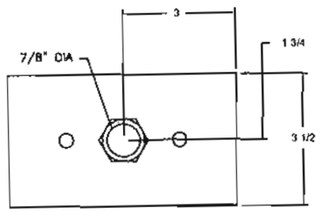

ITEM	QTY	DESCRIPTION
1	1	FLAT BAR 5/8 x 3 1/2 HR x 6
2	2	HEADED CONCRETE ANCHOR HAL 3/8 x 6
3	1	3/4" COIL NUT

BILL OF MATERIALS

APPROXIMATE WEIGHT: 4.3

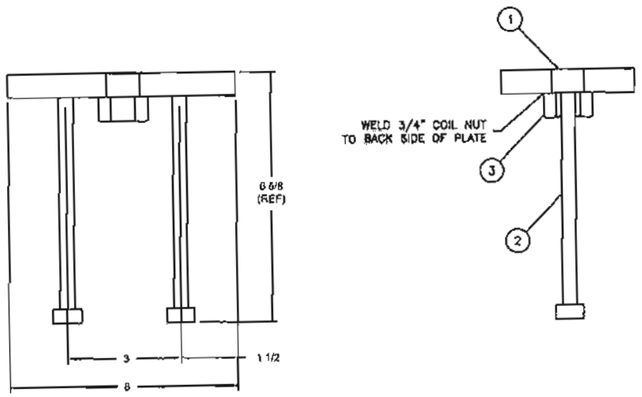

1 PS-10 EMBED DETAIL
SCALE: 3"=1'-0"

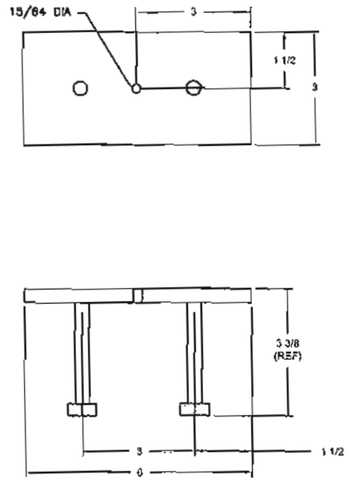

ITEM	QTY	DESCRIPTION
1	1	FLAT BAR 3/8 x 3 1/2 HR x 6
2	2	HEADED CONCRETE ANCHOR HAL 3/8 x 3

BILL OF MATERIALS

APPROXIMATE WEIGHT: 1.20

1 PS-19 EMBED DETAIL
SCALE: 3"=1'-0"

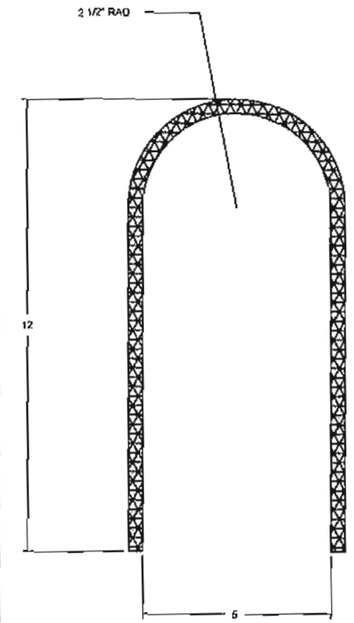

ITEM	QTY	DESCRIPTION
1	1	DEFORMED BAR #3 x 2'-2 1/2"

BILL OF MATERIALS

APPROXIMATE WEIGHT: 1.0

1 R303 FORMED REBAR
SCALE: 3"=1'-0"

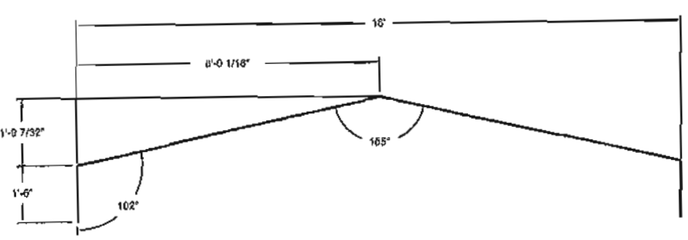

ITEM	QTY	DESCRIPTION
1	1	DEFORMED BAR #3 x 19'-4"

BILL OF MATERIALS

APPROXIMATE WEIGHT: 8.0

1 R311 FORMED REBAR
SCALE: 1/4"=1'-0"

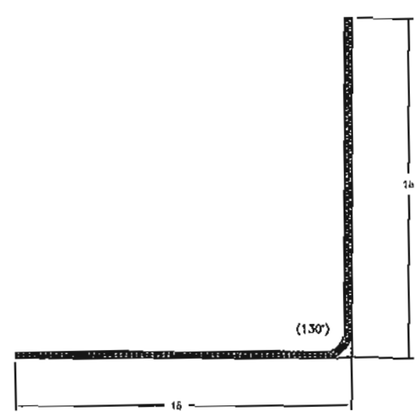

ITEM	QTY	DESCRIPTION
1	1	DEFORMED BAR #3 x 3'-0"

BILL OF MATERIALS

APPROXIMATE WEIGHT: 1.2

1 R320 FORMED REBAR
SCALE: 1 1/2"=1'-0"

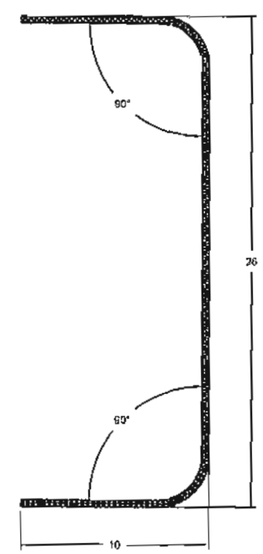

ITEM	QTY	DESCRIPTION
1	1	DEFORMED BAR #3 x 3'-7-1/4"

BILL OF MATERIALS

APPROXIMATE WEIGHT: 1.0

1 R322 FORMED REBAR
SCALE: 1 1/2"=1'-0"

HEIDEN, WILLIAM RICHARD III
STATE OF WASHINGTON
39076
REGISTERED
PROFESSIONAL ENGINEER

EXPIRES April 23, 2019

September 5, 2017

3808 N. Sullivan Bldg. #7 Spokane, WA 99216

CXT

Precast Products

901 N. Highway 77 Hillsboro, TX 76645

PROJECT TITLE

CORTEZ SECTIONAL

BUILDING NUMBER CRS-039

NOTICE

The information contained herein is proprietary and the exclusive property of CXT Incorporated. The information may only be used by the original recipient for the purpose intended. Reproduction or distribution of this information is strictly prohibited without the prior written consent of CXT Incorporated. By allowing use of this information, CXT Incorporated grants no warranty, express or implied, including a warranty of merchantability or of fitness for a particular purpose.

CXT Incorporated

NO.	DESCRIPTION		APPROVED	DATE
SCALE	NTS	DATE		09/01/17
DRAWN	NATE FORNER	FILE NO.		EM-4
CHECKED		PLOT		NTS

COMPILED EMBEDS

DWG NO.	SHEET	REV.
EM-4	4 / 5	A

BILL OF MATERIALS		
ITEM	QTY	DESCRIPTION
1	1	DEFORMED BAR #4 x 3'-6"

APPROXIMATE WEIGHT: 2.4

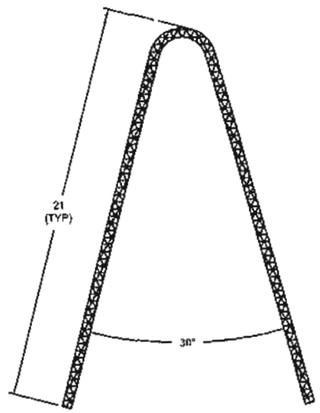

R411 FORMED REBAR
SCALE: 1 1/2"=1'-0"

COLOR SCHEME		
PART NO.	SYMBOL	BACKGROUND
SI2-M-BR	WHITE	BROWN
SI2-M-GR	WHITE	GREEN
SI2-M-CY	WHITE	CYAN
SI2-M-BK	WHITE	BLACK

NOTE:
1) ALL SIGNS TO CONFORM TO ADA 4.30
2) 2 COLORS PRINTED ON CR8-2 AND LAMINATED TO .032 ALUMINUM. 7/16" HOLES DRILLED 6 PLCS. ALL IMAGES ARE RING EMBOSSED TO 1/32" HEIGHT.

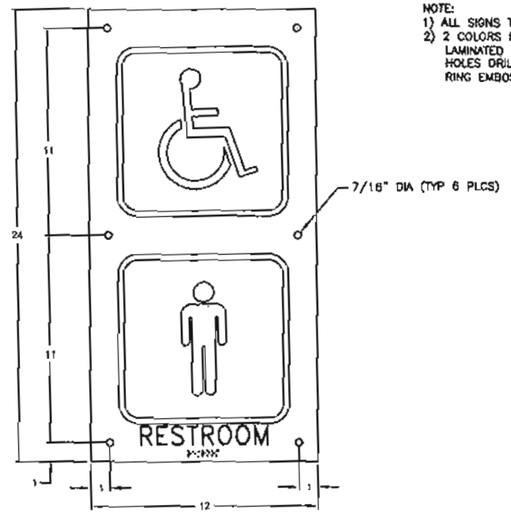

SI2-M SIGN EMBED
SCALE: 1 1/2"=1'-0"

COLOR SCHEME		
PART NO.	SYMBOL	BACKGROUND
SI2-W-BR	WHITE	BROWN
SI2-W-GR	WHITE	GREEN
SI2-W-CY	WHITE	CYAN
SI2-W-BK	WHITE	BLACK

NOTE:
1) ALL SIGNS TO CONFORM TO ADA 4.30
2) 2 COLORS PRINTED ON CR8-2 AND LAMINATED TO .032 ALUMINUM. 7/16" HOLES DRILLED 6 PLCS. ALL IMAGES ARE RING EMBOSSED TO 1/32" HEIGHT.

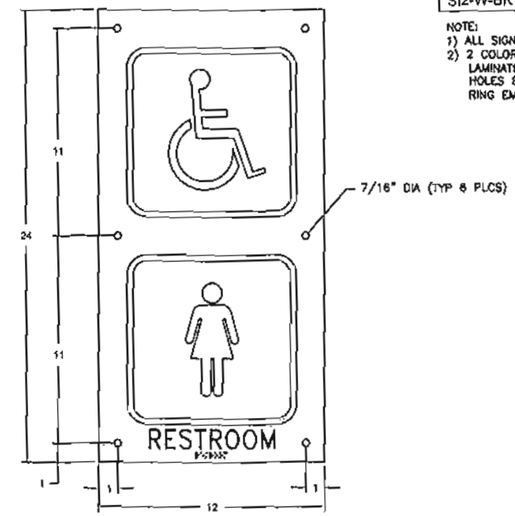

SI2-W SIGN EMBED
SCALE: 1 1/2"=1'-0"

BILL OF MATERIALS		
ITEM	QTY	DESCRIPTION
1	1	1 1/2" DIA STAINLESS STEEL GRAB BAR

APPROXIMATE WEIGHT: 8.0

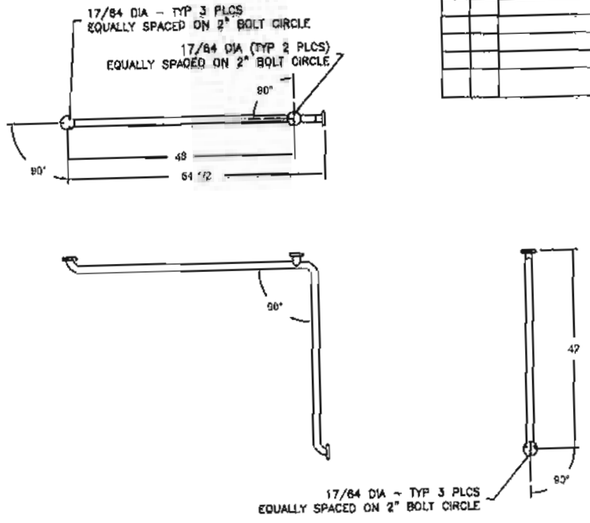

V1 GRAB BAR
SCALE: 3/8"=1'-0"

BILL OF MATERIALS		
ITEM	QTY	DESCRIPTION
1	1	1 1/2" DIA STAINLESS STEEL GRAB BAR

APPROXIMATE WEIGHT: 2.0

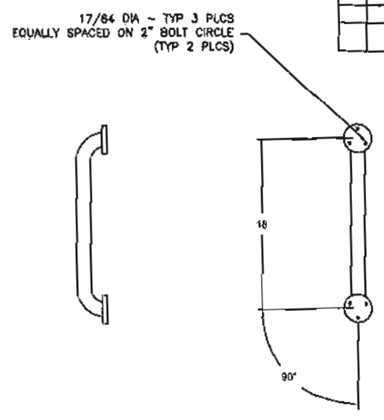

V4 VERTICAL GRAB BAR
SCALE: 3/4"=1'-0"

HEIDEN, WILLIAM RICHARD III
STATE OF WASHINGTON
39076
REGISTERED
PROFESSIONAL ENGINEER

EXPIRES April 23, 2019

September 5, 2017

3808 N. Sullivan Bldg. #7 Spokane, WA 99216

CXT

Precast Products

901 N. Highway 77 Hillsboro, TX 76645

PROJECT TITLE

CORTEZ SECTIONAL

BUILDING NUMBER CRS-039

NOTICE

The information contained herein is proprietary and the exclusive property of CXT Incorporated. The information may only be used by the original recipient for the purpose intended. Reproduction or distribution of this information is strictly prohibited without the prior written consent of CXT Incorporated. By viewing use of this information, CXT Incorporated grants no warranty, express or implied, including a warranty of merchantability or of fitness for a particular purpose.

CXT Incorporated

NO.	DESCRIPTION	APPROVAL	DATE

SCALE	NTS	DATE	09/01/17
DRAWN	NATE POMER	FILE NO.	EM-5
CHECKED		PLOT	NTS

COMPILED EMBEDS

DWG NO.	SHEET	REV.
EM-5	5 / 6	A