STATE	COUNTY	D&F PROJECT NO.	ROAD NAME	ROUTE NO.	SHEET NO.	TOTAL SHEETS
S.C.	GEORGETOWN	31519.11	PETIGRU DRIVE		01	47

GEORGETOWN COUNTY DEPARTMENT OF PUBLIC SERVICES
DIVISION OF PUBLIC WORKS
ENGINEERED PAVING IMPROVEMENT PROJECTS
PLAN OF PROPOSED IMPROVEMENTS PETIGRU DRIVE

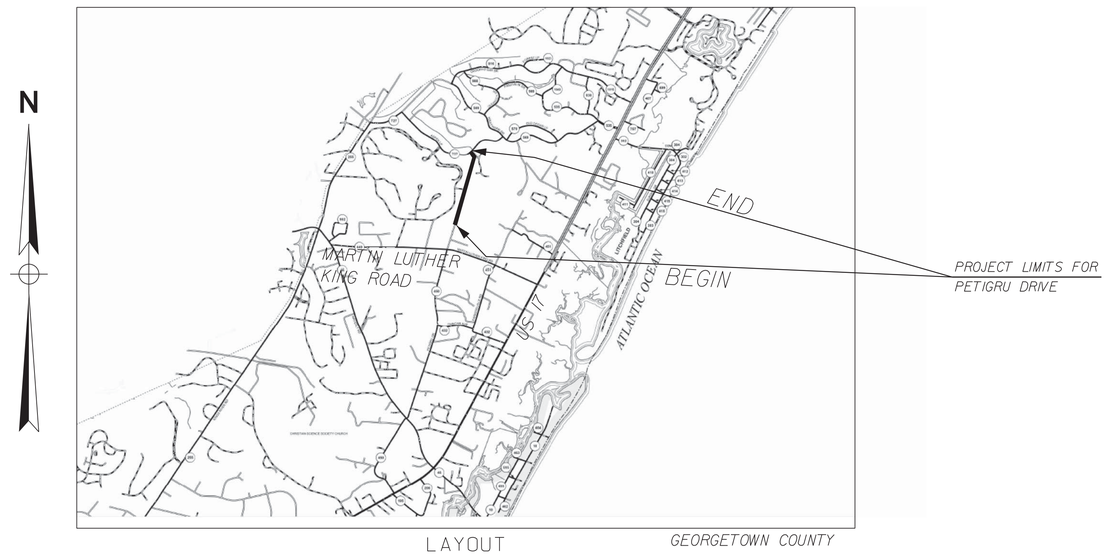

LAYOUT
1" = 2640'

NPDES PERMIT INFORMATION
NPDES Disturbed Area = 3.72 Acres
Approximate Location of Roadway is: Longitude 79°21'23.06"W Latitude 33°32'03.01"N
Hydrology and NPDES Design provided by: Davis & Floyd

NET LENGTH OF ROADWAY	0.523	MILES
NET LENGTH OF OUTFALL	0.000	MILES
NET LENGTH OF PROJECT	0.523	MILES
LENGTH OF EXCEPTIONS	0.000	MILES
GROSS LENGTH OF PROJECT	0.523	MILES

NOTE: ALL WORKMANSHIP AND MATERIAL ON THIS PROJECT TO CONFORM WITH SOUTH CAROLINA DEPARTMENT OF TRANSPORTATION STANDARD SPECIFICATIONS FOR HIGHWAY CONSTRUCTION (2007 EDITION). AND BOOK OF STANDARD DRAWINGS FOR ROAD CONSTRUCTION.

RAILROAD INVOLVEMENT?
YES / (NO)

INDEX OF SHEETS

SHEET #	DESCRIPTION	SHEET TOTALS
01	TITLE SHEET	1
03 - 03B	TYPICAL	3
05	GENERAL CONSTRUCTION NOTES	1
05A	REFERENCE SHEET	1
06 - 11	PLAN AND PROFILE SHEETS	6
PM1 - PM3	PAVEMENT MARKING SHEETS	3
EC01	EROSION CONTROL SHEETS	1
X1 - X22	CROSS SECTIONS	22
D01 - D07	DETAIL SHEETS	7
	TOTAL SHEETS	45

CONSULTING ENGINEERING FIRM	CONSULTANT - PROJECT ENGINEER
SOUTH CAROLINA DAVIS & FLOYD, INC. No. C00538 CERTIFICATE OF AUTHORIZATION	SOUTH CAROLINA REGISTERED PROFESSIONAL ENGINEER No. 20214 GEORGE TILLEY BILL

FOR CONSTRUCTION : April 16, 2018
DATE

STATE	COUNTY	D&F PROJECT NO.	ROAD NAME	SHEET NO.	TOTAL SHEETS
S.C.	GEORGETOWN	31519.11	PETIGRU DRIVE	03	

TYPICAL SECTION
PETIGRU DRIVE
GEORGETOWN COUNTY

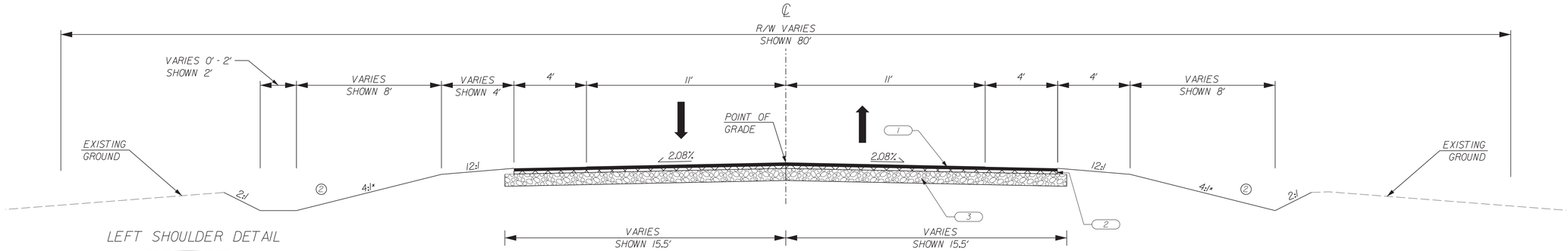

LEFT SHOULDER DETAIL

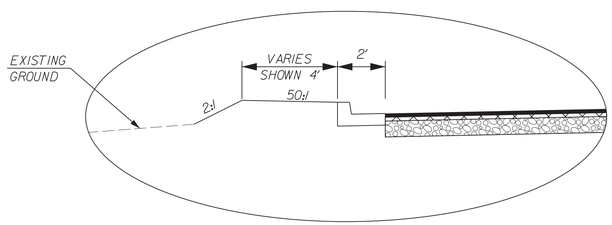

FROM STA. 40+86.48 TO STA. 41+36.48

1

PETIGRU DRIVE
TYPICAL SECTION
STA. 20+37.23 TO STA. 24+50.00 RIGHT
STA. 20+37.23 TO STA. 24+50.00 LEFT
STA. 36+50.00 TO STA. 45+12.76 RIGHT
STA. 36+50.00 TO STA. 45+12.76 LEFT

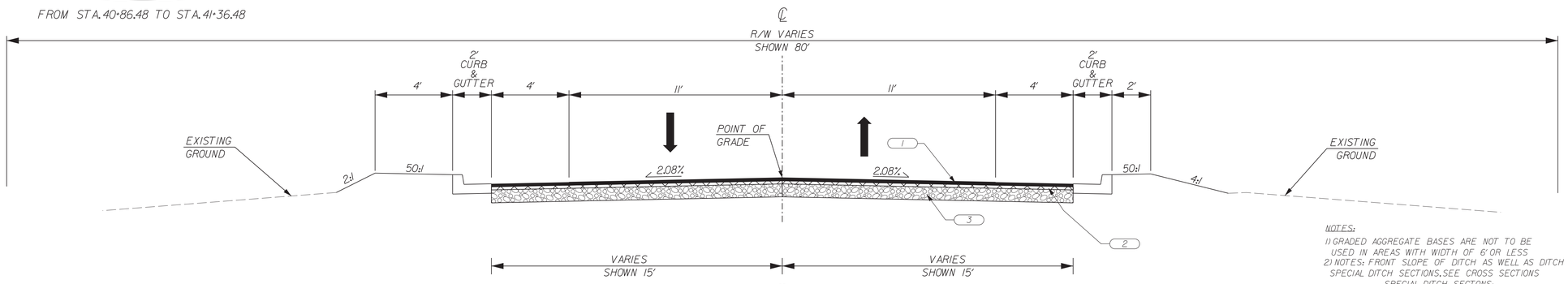

2

PETIGRU DRIVE
TYPICAL SECTION
STA. 24+50.00 TO STA. 26+50.00 RIGHT
STA. 24+50.00 TO STA. 26+50.00 LEFT

PAVEMENT DESIGN	
1	175 #/SY HOT MIX ASPHALT SURFACE TYPE C
2	200#/SY HOT MIX ASPHALT INTERMEDIATE COURSE TYPE C
3	6" GRADED AGGREGATE BASE

NOTES:

1) GRADED AGGREGATE BASES ARE NOT TO BE USED IN AREAS WITH WIDTH OF 6' OR LESS
2) NOTES: FRONT SLOPE OF DITCH AS WELL AS DITCH BOTTOM WIDTH VARIES IN SPECIAL DITCH SECTIONS. SEE CROSS SECTIONS
   SPECIAL DITCH SECTONS:
   LEFT: STA. 20+50.00 TO STA. 24+95.31
   STA. 31+00.00 TO STA. 32+50.00
   STA. 34+00.00 TO STA. 38+00.00
   STA. 41+50.00 TO STA. 45+00.00
   RIGHT: STA. 20+50.00 TO STA. 23+75.00
   STA. 34+35.53 TO STA. 45+00.00
3) SEE CROSS SECTIONS FOR VARIABLE DITCH WIDTHS
4) GUARDRAIL TO BE INSTALLED WITH FACE OF GUARDRAIL AT BACK OF CURB. 6' PRIVACY FENCE TO BE INSTALLED 2' BEHIND BACK OF GUARDRAIL. SEE PLANS AND CROSS SECTIONS FOR MORE INFORMATION
5) PAVING UNDER GUARDRAIL BEHIND BACK OF CURB TO BE 4" THICK CONCRETE
6) SEE DETAIL FOR PAVING UNDER GUARDRAIL FOR MORE INFORMATION

RTE. PETIGRU DRIVE DESIGN SPEED		
MPH	FROM STA.	TO STA.
30	20+37.23	47+89.89
EXCEPTIONS TO DESIGN SPEED		

SOUTH CAROLINA
DAVIS & FLOYD, INC.
No. C00538
CERTIFICATE OF AUTHORIZATION

SOUTH CAROLINA
PROFESSIONAL ENGINEER
No. 20214
4/3/2018
GEORGE TILLEY BULL

DAVIS & FLOYD
SINCE 1954
WWW.DAVISFLOYD.COM

3229 W. MONTAGUE AVENUE
NORTH CHARLESTON, SC 29418
(843) 554-8102

REV. NO.	BY	DATE	DESCRIPTION OF REVISION
4			
3			
2			
1			

DGN. AMS DATE
R/W DATE
CHK. GTB DATE

GEORGETOWN COUNTY
ENGINEERED ROADS PROGRAM

PETIGRU DRIVE
TYPICAL SECTION

NTS

STATE	COUNTY	D&F PROJECT NO.	ROAD NAME	SHEET NO.	TOTAL SHEETS
S.C.	GEORGETOWN	31519.11	PETIGRU DRIVE	03A	

TYPICAL SECTION
PETIGRU DRIVE
GEORGETOWN COUNTY

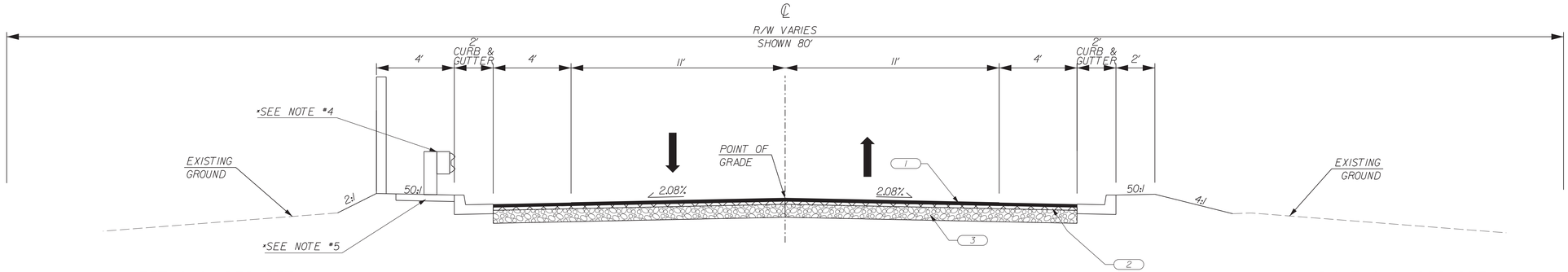

LEFT SHOULDER DETAIL

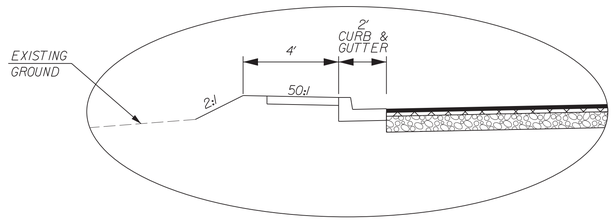

FROM STA. 30+00.00 TO STA. 31+89.96

RIGHT SHOULDER DETAIL

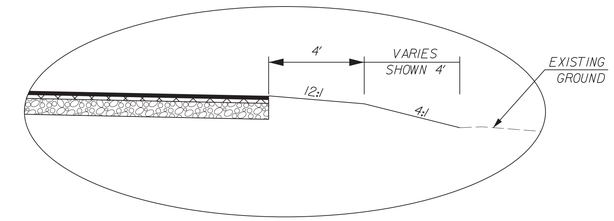

FROM STA. 29+41.16 TO STA. 30+95.12

(3)

PETIGRU DRIVE
TYPICAL SECTION
STA. 26+50.00 TO STA. 29+41.16 RIGHT
STA. 26+50.00 TO STA. 30+00.00 LEFT

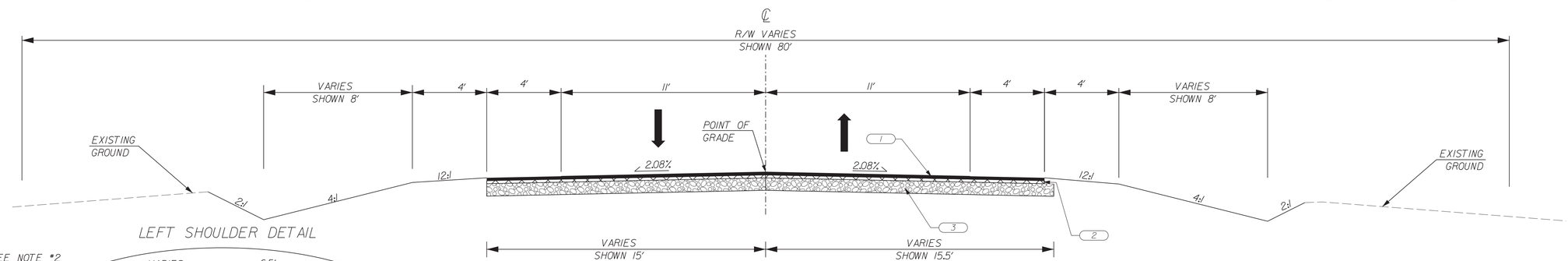

LEFT SHOULDER DETAIL

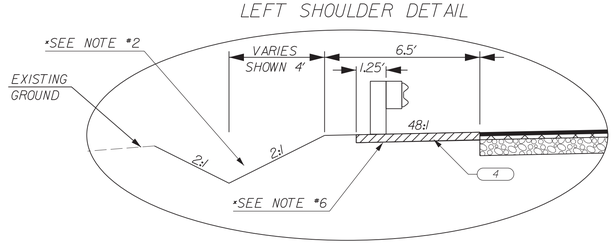

FROM STA. 33+44.52 TO STA. 36+44.52

(4)

PETIGRU DRIVE
TYPICAL SECTION
STA. 30+95.12 TO STA. 36+50.00 RIGHT
STA. 31+89.96 TO STA. 33+44.52 LEFT

RTE. PETIGRU DRIVE DESIGN SPEED		
MPH	FROM STA.	TO STA.
30	20+37.23	47+89.89
EXCEPTIONS TO DESIGN SPEED		

1		PAVEMENT DESIGN
2		175 #/SY HOT MIX ASPHALT SURFACE TYPE C
3		200#/SY HOT MIX ASPHALT INTERMEDIATE COURSE TYPE C
4		6" GRADED AGGREGATE BASE
		420 #/SY HOT MIX ASPHALT SURFACE TYPE C

NOTES:

1) GRADED AGGREGATE BASES ARE NOT TO BE USED IN AREAS WITH WIDTH OF 6' OR LESS
2) NOTES: FRONT SLOPE OF DITCH AS WELL AS DITCH BOTTOM WIDTH VARIES IN SPECIAL DITCH SECTIONS. SEE CROSS SECTIONS
   SPECIAL DITCH SECTIONS:
   LEFT: STA. 20+50.00 TO STA. 24+95.31
   STA. 31+00.00 TO STA. 32+50.00
   STA. 34+00.00 TO STA. 38+00.00
   STA. 41+50.00 TO STA. 45+00.00
   RIGHT: STA. 20+50.00 TO STA. 23+75.00
   STA. 34+35.53 TO STA. 45+00.00
3) SEE CROSS SECTIONS FOR VARIABLE DITCH WIDTHS
4) GUARDRAIL TO BE INSTALLED WITH FACE OF GUARDRAIL AT BACK OF CURB. 6' PRIVACY FENCE TO BE INSTALLED 2' BEHIND BACK OF GUARDRAIL. SEE PLANS AND CROSS SECTIONS FOR MORE INFORMATION
5) PAVING UNDER GUARDRAIL BEHIND BACK OF CURB TO BE 4" CLASS 2500 PORTLAND CEMENT
6) SEE DETAIL D07 FOR PAVING UNDER GUARDRAIL FOR MORE INFORMATION

SOUTH CAROLINA DAVIS & FLOYD, INC. No. C00538 CERTIFICATE OF AUTHORIZATION

SOUTH CAROLINA REGISTERED PROFESSIONAL ENGINEER No. 20214 4/16/18 GEORGE TILLEY BULL

DAVIS & FLOYD

SINCE 1954

WWW.DAVISFLOYD.COM

3229 W. MONTAGUE AVENUE
NORTH CHARLESTON, SC 29418
(843) 554-9802

REV. NO.	BY	DATE	DESCRIPTION OF REVISION
4			
3			
2			
1			

DGN. AMS DATE
R/W DATE
CHK. GTB DATE

GEORGETOWN COUNTY
ENGINEERED ROADS PROGRAM

PETIGRU DRIVE
TYPICAL SECTION

NTS

STATE	COUNTY	D&F PROJECT NO.	ROAD NAME	SHEET NO.	TOTAL SHEETS
S.C.	GEORGETOWN	31519.11	PETIGRU DRIVE	03B	

TYPICAL SECTION
PETIGRU DRIVE
GEORGETOWN COUNTY

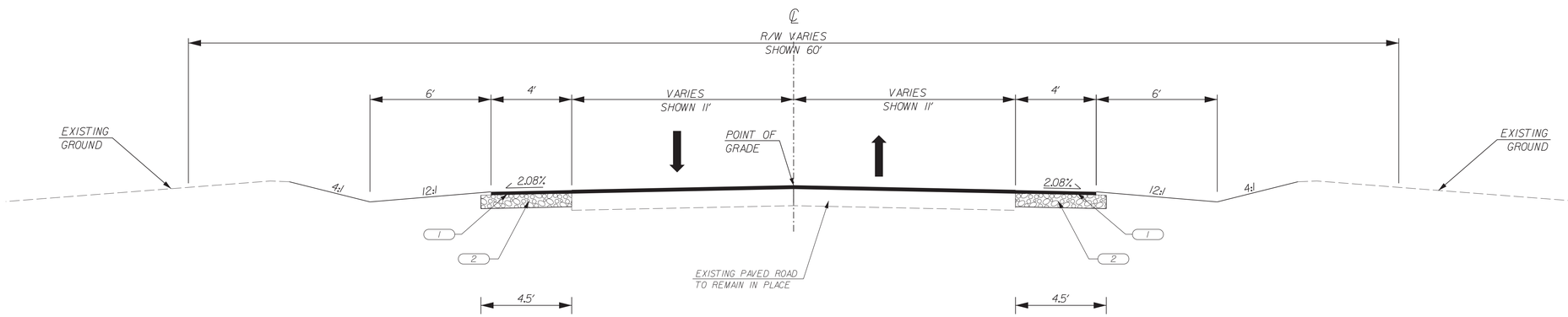

⑤

PETIGRU DRIVE
TYPICAL SECTION
STA. 45+12.76 TO STA. 47+89.89

PAVEMENT DESIGN

1		175 #/SY HOT MIX ASPHALT SURFACE TYPE C
2		450 #/SY HOT MIX ASPHALT BASE TYPE B

NOTE: GRADED AGGREGATE BASES ARE NOT TO BE USED IN AREAS WITH WIDTH OF 6' OR LESS

RTE. PETIGRU DRIVE DESIGN SPEED		
MPH	FROM STA.	TO STA.
30	20+37.23	47+89.89
EXCEPTIONS TO DESIGN SPEED		

SOUTH CAROLINA PROFESSIONAL ENGINEERING CERTIFICATE OF AUTHORIZATION
DAVIS & FLOYD, INC.
No. C00538

SOUTH CAROLINA PROFESSIONAL ENGINEER
No. 20214
4/3/2018
GEORGE TILLEY BULL

DAVIS & FLOYD
SINCE 1954
WWW.DAVISFLOYD.COM

3229 W. MONTAGUE AVENUE
NORTH CHARLESTON, SC 29418
(843) 554-8102

REV. NO.	BY	DATE	DESCRIPTION OF REVISION
4			
3			
2			
1			

DGN. AMS DATE
R/W DATE
CHK. GTB DATE

GEORGETOWN COUNTY
ENGINEERED ROADS PROGRAM

PETIGRU DRIVE
TYPICAL SECTION

NTS

STATE	COUNTY	D&F PROJECT NO.	ROAD NAME	SHEET NO.	TOTAL SHEETS
S.C.	GEORGETOWN	31519.11	PETIGRU DRIVE	05	

GENERAL CONSTRUCTION NOTES:

THE CONTRACTOR MUST PERFORM ALL WORK IN ACCORDANCE WITH THE SOUTH CAROLINA DEPARTMENT OF TRANSPORTATION STANDARD DRAWINGS FOR ROAD CONSTRUCTION (LATEST EDITION), SCDOT STANDARD SPECIFICATIONS FOR HIGHWAY CONSTRUCTION (LATEST EDITION), SCDOT TRAFFIC SIGNAL SPECIFICATIONS, AND THE MUTCD, 2009 EDITION.

THE CONTRACTOR SHALL IMPLEMENT EROSION AND SEDIMENT CONTROL MEASURES TO PREVENT THE TRANSFER OF SUSPENDED SOLIDS AND/OR CHEMICAL SOLUTIONS OFF-SITE, AND TO PREVENT EXCESSIVE SILTATION OF EXISTING DRAINAGE PIPES, CULVERTS, AND DITCHES. THE CONTRACTOR SHALL ROUTINELY INSPECT AND MAINTAIN THESE DEVICES. ALL CHECK DAMS AND RIPRAP SHOWN ARE CLASS B UNLESS OTHERWISE STATED.

THE LOCATIONS OF EXISTING UTILITIES AND STORM DRAINAGE FACILITIES SHOWN ON THE PLANS ARE PROVIDED FOR THE CONVENIENCE OF THE CONTRACTOR. THE ENGINEER ASSUMES NO RESPONSIBILITY FOR THE ACCURACY OR COMPLETENESS OF THE UTILITIES INFORMATION SHOWN ON THE DRAWINGS. IT IS THE CONTRACTOR'S RESPONSIBILITY TO VERIFY THE EXACT LOCATION OF ALL UTILITIES BEFORE CONSTRUCTION. PRIOR TO THE START OF ANY CONSTRUCTION ACTIVITY, IT SHALL BE THE CONTRACTOR'S RESPONSIBILITY TO CONFIRM THAT THE PROPER COORDINATION WITH THE VARIOUS UTILITY OWNERS HAS BEEN PERFORMED. THE CONTRACTOR SHALL COOPERATE WITH THE UTILITY DURING RELOCATION OPERATIONS.

THE LOCATION OF UTILITIES SHOWN IN THE PLANS SHOULD BE CONSIDERED APPROXIMATE ONLY. THE VERIFIED LOCATIONS/ELEVATIONS APPLY ONLY AT THE POINTS DESIGNATED BY A TEST HOLE. INTERPOLATIONS BETWEEN THESE POINTS HAVE NOT BEEN VERIFIED.

THE CONTRACTOR SHALL PROTECT ALL EXISTING STRUCTURES, STORM DRAINS, UTILITIES AND OTHER FACILITIES TO REMAIN AND SHALL REPAIR OR COORDINATE WITH UTILITY OWNERS TO REPAIR ANY DAMAGES DUE TO CONSTRUCTION ACTIVITIES AT NO ADDITIONAL COST TO THE OWNER.

THE CONTRACTOR SHALL NOT STORE ANY MATERIALS OR EQUIPMENT WITHIN 5 FT OF THE EDGE OF TRAVEL WAY. IT IS THE RESPONSIBILITY OF THE CONTRACTOR TO OBTAIN PERMISSION TO STORE EQUIPMENT ON ADJACENT PROPERTIES.

PIPE LENGTHS THAT ARE SHOWN ON THE PLANS ARE ROUNDED TO THE NEAREST 1' INCREMENT AND CALCULATED ALONG THE PIPE SLOPE FROM CENTER OF BOX TO CENTER OF BOX. FIELD ADJUSTMENTS OF THE ACTUAL PIPE LENGTHS MAY BE NECESSARY.

ANY COSTS ASSOCIATED WITH REMOVING EXISTING PIPE SHALL BE INCLUDED IN THE COST OF PLACING NEW PIPE.

FINAL SURFACE COURSE ON ALL ROADWAYS SHALL NOT BE PLACED UNTIL ALL DRAINAGE AND CURB AND GUTTER INSTALLATIONS ARE COMPLETE.

THE CONTRACTOR SHALL PROVIDE AND MAINTAIN PROPER DEWATERING PROCEDURES TO PREVENT THE FLOW AND ACCUMULATION OF SURFACE AND GROUND WATER IN EXCAVATED AREAS. ALL OF THE WATER PUMPED OR DRAINED SHALL BE DISPOSED OF WITHOUT UNDUE INTERFERENCE WITH OTHER WORK OR DAMAGE TO PAVEMENTS AND OTHER SURFACES OR PROPERTY. DISCHARGED WATER FROM ALL DEWATERING OPERATIONS SHALL BE FILTERED IN ACCORDANCE WITH SCDHEC OR OCRM REGULATIONS OR AS APPROVED BY THE ENGINEER. A PLAN FOR DEWATERING SHALL BE SUBMITTED TO THE RESIDENT CONSTRUCTION ENGINEER AND OCRM FOR APPROVAL PRIOR TO ANY WORK BEING PERFORMED WHERE DEWATERING IS REQUIRED. ONCE APPROVED AN ADDITIONAL COPY OF THE PLAN SHOULD BE PROVIDED TO GEORGETOWN COUNTY PUBLIC WORKS.

THE CONTRACTOR SHALL PROVIDE A DETAILED CONTRACTOR'S EROSION CONTROL PLAN TO THE RESIDENT CONSTRUCTION MANAGER FOR APPROVAL PRIOR TO COMMENCING ANY WORK ON THE PROJECT.

THE CONTRACTOR SHALL PROVIDE A DETAILED TRAFFIC CONTROL PLAN TO THE RESIDENT CONSTRUCTION MANAGER FOR APPROVAL BEFORE STARTING ANY WORK ON THE PROJECT. THIS PLAN SHALL INCLUDE DETAILS CONCERNING PLACEMENT OF REFLECTORIZED BARRELS, CONES, AND/OR TYPE 2 BARRICADES IN ACCORDANCE WITH THE 2009 MUTCD.

THE CONTRACTOR SHALL PROVIDE ALL SHEETING, SHORING, AND BRACING REQUIRED TO PROTECT ADJACENT STRUCTURES AND UTILITIES OR TO MINIMIZE TRENCH WIDTH AS REQUIRED. PAYMENT FOR SUCH MEASURES IS INCLUDED IN THE BID PRICE FOR THE ITEM BEING CONSTRUCTED.

WHERE STORM PIPES AND STRUCTURES ARE IDENTIFIED TO BE ABANDONED IN PLACE, THE FOLLOWING PROCEDURES SHALL BE UTILIZED:

PIPES: PLUG END(S) WITH BRICK AND GROUT.
STRUCTURES: REMOVE RIM/COVER AND CONE OR TOP SLAB.
PLUG PIPE OPENINGS WITH BRICK AND GROUT.
FILL STRUCTURE WITH FLOWABLE FILL TO BOTTOM OF PAVEMENT SECTION.
TEMPORARY ASPHALT IF NEEDED.

ANY COSTS ASSOCIATED WITH ABANDONING PIPES OR STRUCTURES SHALL BE INCLUDED IN THE COST OF PLACING NEW PIPE OR STRUCTURES ACCORDINGLY.

PAVE ALL DRIVEWAYS TO R/W LINE. UNLESS THE DRIVEWAY IS LABELED, THE STANDARD DRIVEWAY RADIUS IS 10'. THIS MAY BE MODIFIED PER DIRECTION OF THE ENGINEER TO FIT FIELD CONDITIONS.

THE CONTRACTOR SHALL REVIEW AND VERIFY ALL DIMENSIONS SHOWN ON THE PLANS AND REVIEW ALL FIELD CONDITIONS THAT MAY AFFECT CONSTRUCTION. SHOULD DISCREPANCIES OCCUR, THE CONTRACTOR SHALL NOTIFY THE ENGINEER TO OBTAIN THE ENGINEER'S CLARIFICATION BEFORE COMMENCING CONSTRUCTION.

THE ENGINEER RESERVES THE RIGHT TO ADJUST THE LOCATION OF ALL PROPOSED IMPROVEMENTS TO MEET FIELD CONDITIONS IF NECESSARY.

STABILIZATION MEASURES MUST BE INITIATED AS SOON AS PRACTICABLE IN PORTIONS OF THE SITE WHERE CONSTRUCTION ACTIVITIES HAVE TEMPORARILY OR PERMANENTLY CEASED, BUT IN NO CASE MORE THAN 14 DAYS AFTER THE CONSTRUCTION ACTIVITY IN THAT PORTION OF THE SITE HAS TEMPORARILY OR PERMANENTLY CEASED.

ALL DISTURBED AREAS SHALL BE SEEDED AFTER GRADING IS COMPLETE OR WITHIN 7 DAYS AFTER WORK STOPS IN AN AREA UNLESS WORK IS TO RESUME IN THAT AREA IN LESS THAN 21 DAYS.

NOTE:
1. SEE SCDOT STANDARD DRAWING NO. 625-305-00 FOR PAVEMENT MARKING DETAILS.

SOUTH CAROLINA DAVIS & FLOYD, INC. No. C00538 CERTIFICATE OF AUTHORIZATION

SOUTH CAROLINA REGISTERED PROFESSIONAL ENGINEER No. 20214 24/3/2018 GEORGE TILLEY BULL

DAVIS & FLOYD
SINCE 1954
WWW.DAVISFLOYD.COM

3229 W. MONTAGUE AVENUE
NORTH CHARLESTON, SC 29418
(843) 554-8402

REV. NO.	BY	DATE	DESCRIPTION OF REVISION
4			
3			
2			
1			

DGN. AMS DATE
R/W DATE
CHK. GTB DATE

GEORGETOWN COUNTY
ENGINEERED ROADS PROGRAM

PETIGRU DRIVE
GENERAL CONSTRUCTION NOTES

NTS

STATE	COUNTY	D&F PROJECT NO.	ROAD NAME	SHEET NO.	TOTAL SHEETS
S.C.	GEORGETOWN	31519.11	PETIGRU DRIVE	5A	

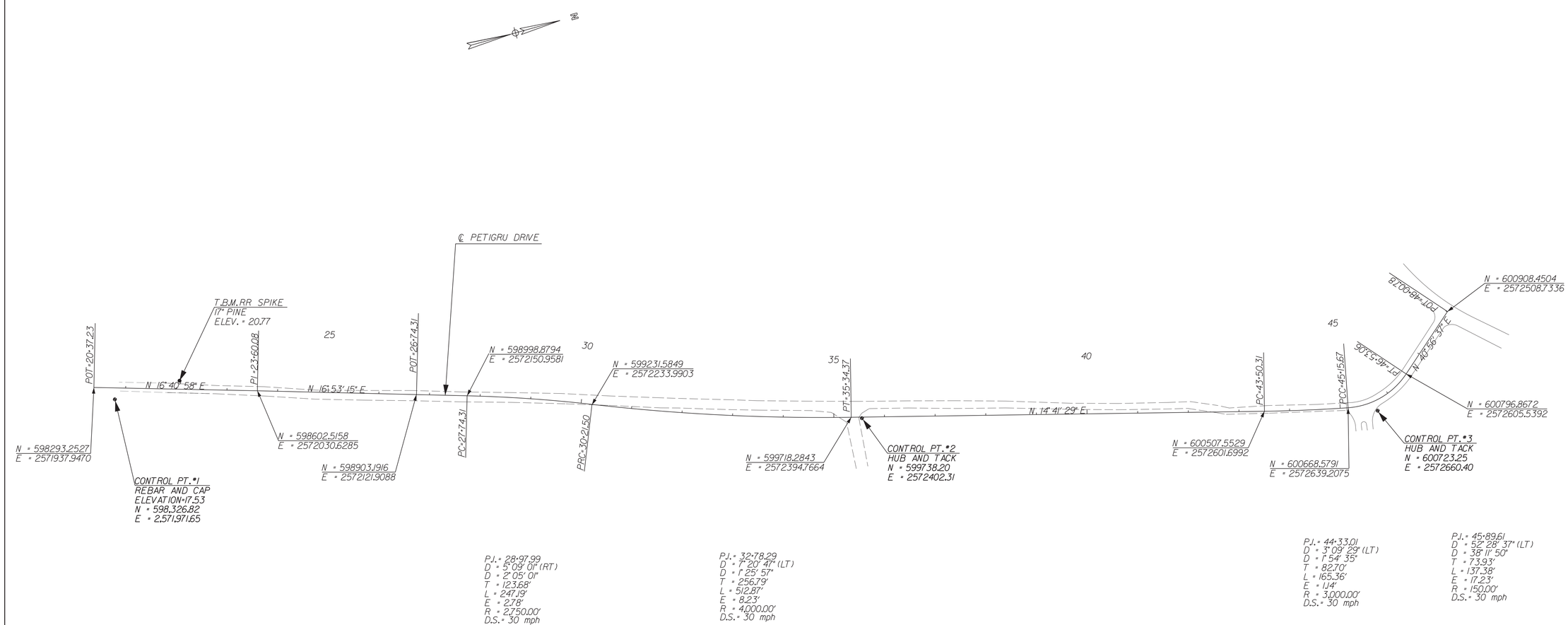

SOUTH CAROLINA
DAVIS & FLOYD, INC.
No. C00538
CERTIFICATE OF AUTHORIZATION

SOUTH CAROLINA
REGISTERED PROFESSIONAL ENGINEER
No. 20214
04/3/2018
GEORGE TILLEY BALL

DAVIS & FLOYD

SINCE 1954

WWW.DAVISFLOYD.COM

3229 W. MONTAGUE AVENUE
NORTH CHARLESTON, SC 29418
(843) 554-8902

REV. NO.	BY	DATE	DESCRIPTION OF REVISION
4			
3			
2			
1			

DGN. AMS DATE
R/W DATE
CHK. GTB DATE

GEORGETOWN COUNTY
ENGINEERED ROADS PROGRAM

PETIGRU DRIVE
REFERENCE SHEET

SCALE 1"= 100'

STATE	COUNTY	D&F PROJECT NO.	ROAD NAME	SHEET NO.	TOTAL SHEETS
S.C.	GEORGETOWN	31519.11	PETIGRU DRIVE	06	

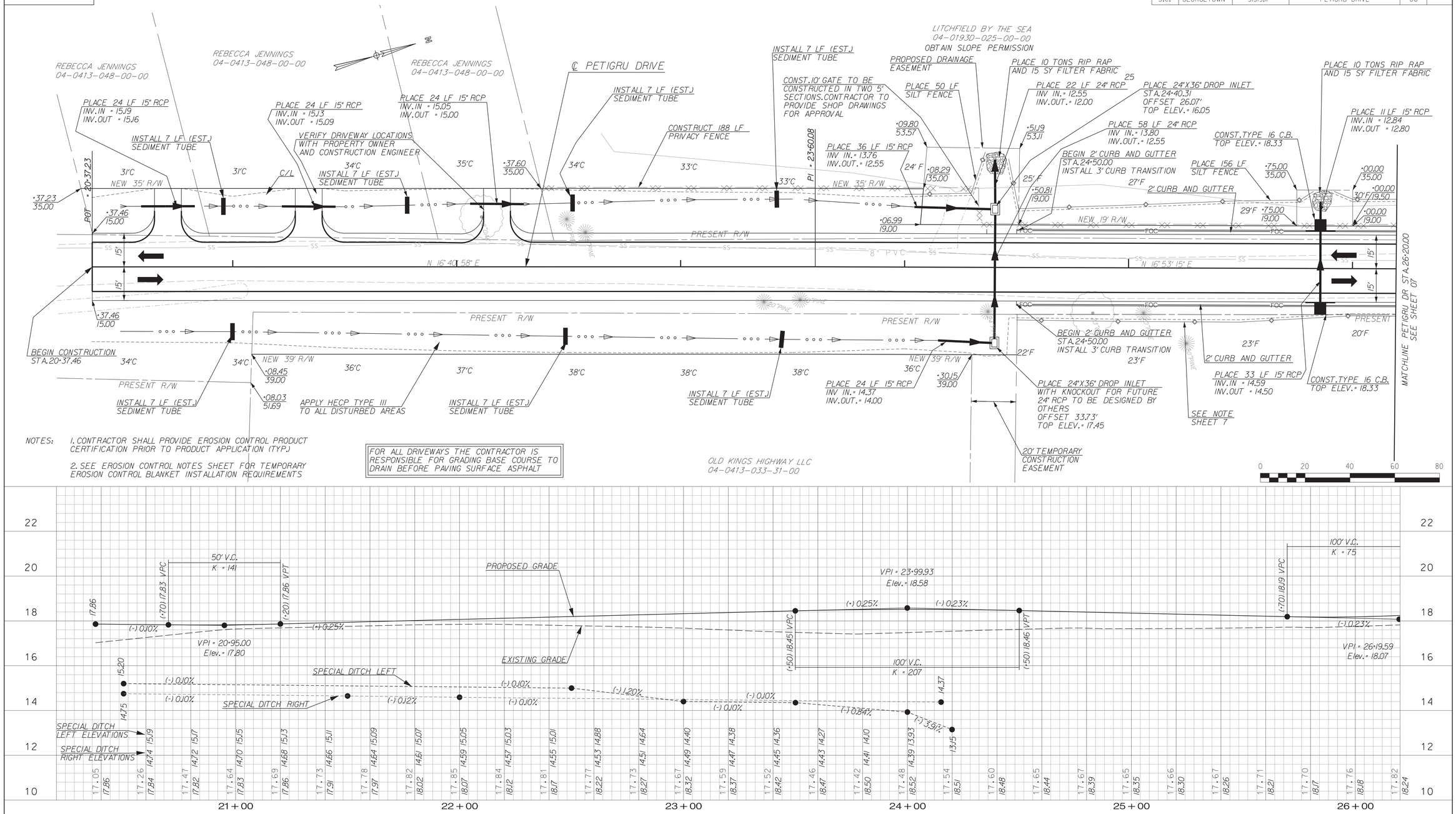

NOTES:

1. CONTRACTOR SHALL PROVIDE EROSION CONTROL PRODUCT CERTIFICATION PRIOR TO PRODUCT APPLICATION (TYP.)

2. SEE EROSION CONTROL NOTES SHEET FOR TEMPORARY EROSION CONTROL BLANKET INSTALLATION REQUIREMENTS

FOR ALL DRIVEWAYS THE CONTRACTOR IS RESPONSIBLE FOR GRADING BASE COURSE TO DRAIN BEFORE PAVING SURFACE ASPHALT

SOUTH CAROLINA DAVIS & FLOYD, INC. No. C00538 CERTIFICATE OF AUTHORIZATION

SOUTH CAROLINA REGISTERED PROFESSIONAL ENGINEER No. 20211 04/3/2018 GEORGE TILLEY BULL

DAVIS & FLOYD

SINCE 1954

WWW.DAVISFLOYD.COM

3229 W. MONTAGUE AVENUE
NORTH CHARLESTON, SC 29418
(843) 554-8162

REV. NO.	BY	DATE	DESCRIPTION OF REVISION
4			
3			
2			
1			

DGN. AMS DATE
R/W DATE
CHK. GTB DATE

GEORGETOWN COUNTY
ENGINEERED ROADS PROGRAM

PETIGRU DRIVE
PLAN AND PROFILE SHEET

SCALE 1" = 20' HOR. 1" = 2' VER.

STATE	COUNTY	D&F PROJECT NO.	ROAD NAME	SHEET NO.	TOTAL SHEETS
S.C.	GEORGETOWN	31519.11	PETIGRU DRIVE	07	

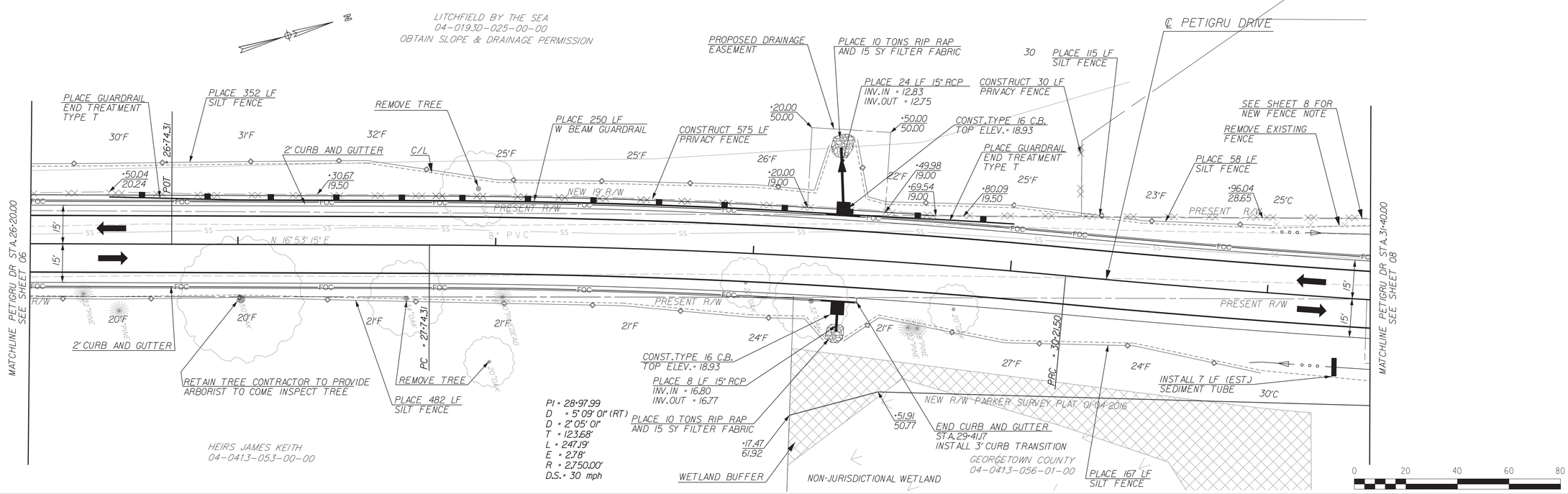

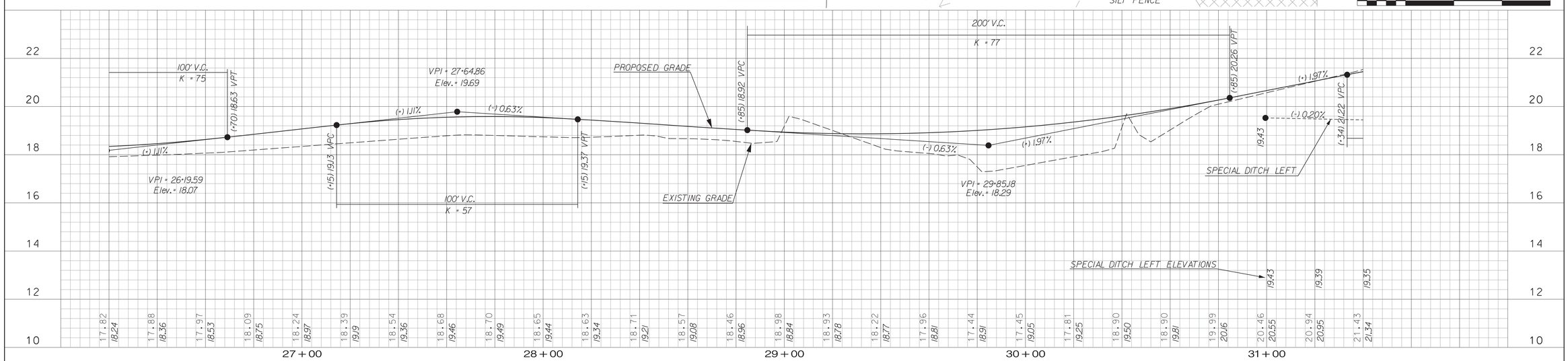

DAVIS & FLOYD, INC. No. C00538 — SOUTH CAROLINA CERTIFICATE OF AUTHORIZATION

SOUTH CAROLINA PROFESSIONAL ENGINEER No. 20214 4/3/2018 GEORGE TILLEY BULL

DAVIS & FLOYD

SINCE 1954

WWW.DAVISFLOYD.COM

3229 W. MONTAGUE AVENUE NORTH CHARLESTON, SC 29418 (843) 554-9802

REV. NO.	BY	DATE	DESCRIPTION OF REVISION
4			
3			
2			
1			

DGN. AMS DATE
R/W DATE
CHK. GTB DATE

GEORGETOWN COUNTY
ENGINEERED ROADS PROGRAM

PETIGRU DRIVE
PLAN AND PROFILE SHEET

SCALE 1"= 20' HOR. 1" = 2' VER.

STATE	COUNTY	D&F PROJECT NO.	ROAD NAME	SHEET NO.	TOTAL SHEETS
S.C.	GEORGETOWN	31519.11	PETIGRU DRIVE	08	

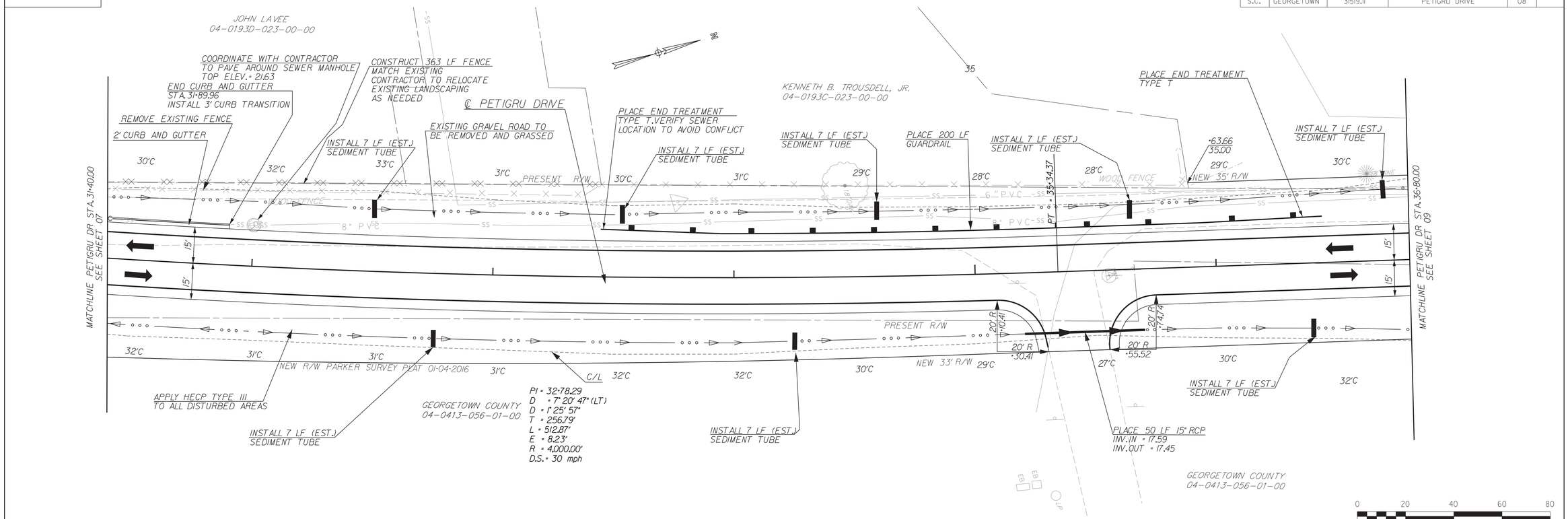

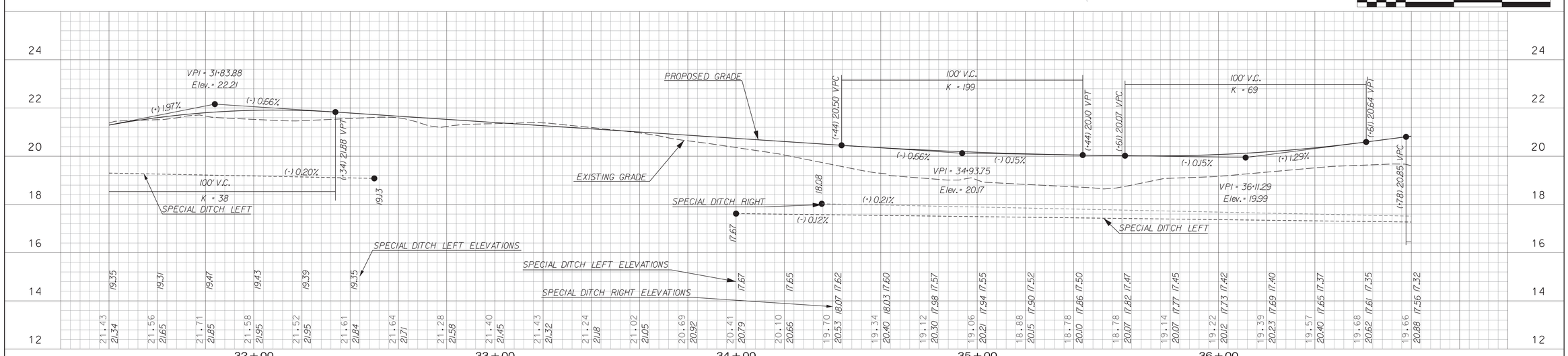

DAVIS & FLOYD, INC. SOUTH CAROLINA CERTIFICATE OF AUTHORIZATION No. C00538

SOUTH CAROLINA PROFESSIONAL ENGINEER No. 20214 GEORGE TILLEY BALL 4/3/2018

DAVIS & FLOYD

SINCE 1954

WWW.DAVISFLOYD.COM

3229 W. MONTAGUE AVENUE NORTH CHARLESTON, SC 29418 (843) 554-8602

REV. NO.	BY	DATE	DESCRIPTION OF REVISION
4			
3			
2			
1			

DGN. AMS DATE
R/W DATE
CHK. GTB DATE

GEORGETOWN COUNTY ENGINEERED ROADS PROGRAM

PETIGRU DRIVE
PLAN AND PROFILE SHEET

SCALE 1"= 20' HOR. 1" = 2' VER.

STATE	COUNTY	D&F PROJECT NO.	ROAD NAME	SHEET NO.	TOTAL SHEETS
S.C.	GEORGETOWN	31519.11	PETIGRU DRIVE	09	

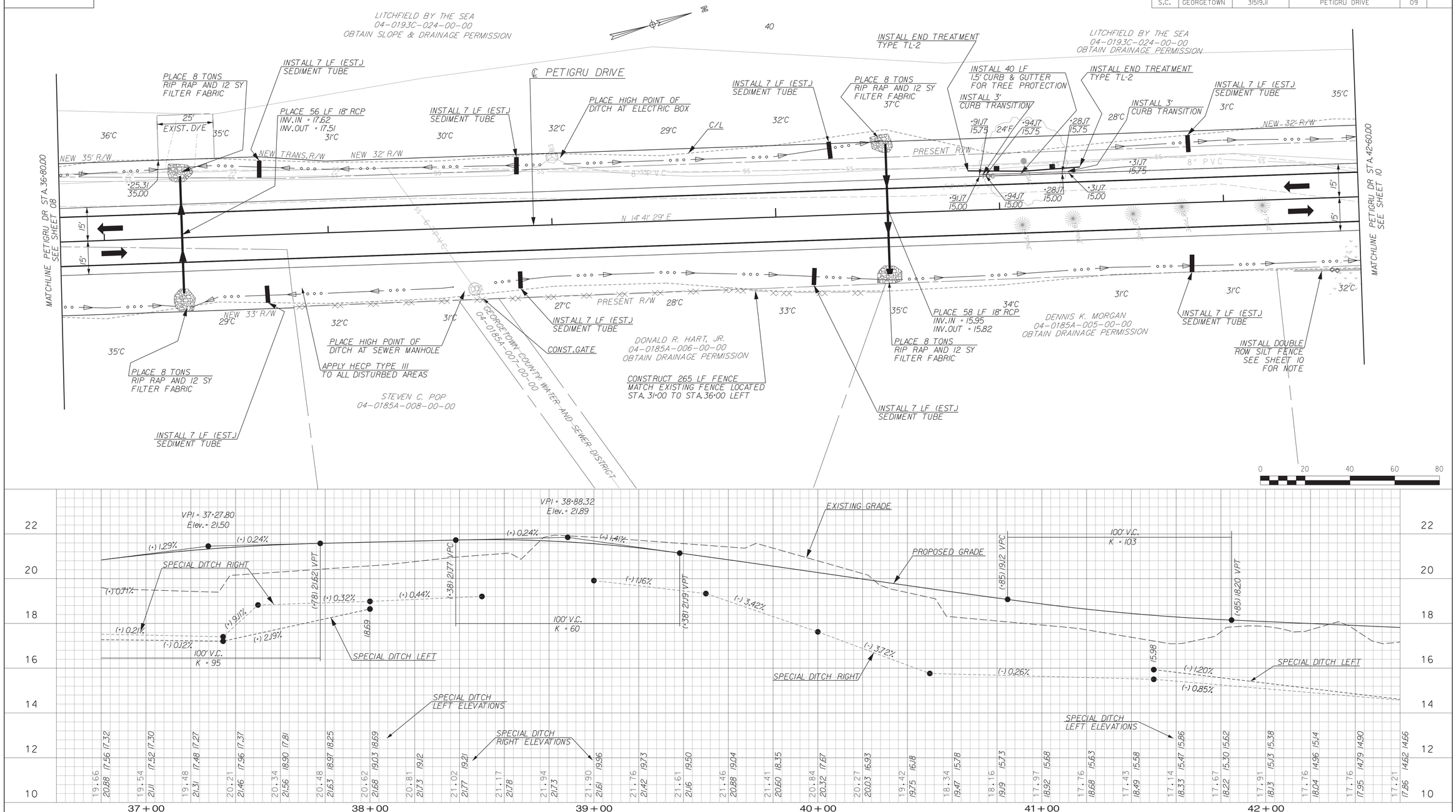

DAVIS & FLOYD, INC. — SOUTH CAROLINA — CERTIFICATE OF AUTHORIZATION No. C00538

SOUTH CAROLINA PROFESSIONAL ENGINEER No. 20214 — 4/3/2018 — GEORGE TILLEY BULL

DAVIS & FLOYD

SINCE 1954

WWW.DAVISFLOYD.COM

3229 W. MONTAGUE AVENUE
NORTH CHARLESTON, SC 29418
(843) 554-8062

REV. NO.	BY	DATE	DESCRIPTION OF REVISION
4			
3			
2			
1			

DGN. AMS DATE
R/W DATE
CHK. GTB DATE

GEORGETOWN COUNTY
ENGINEERED ROADS PROGRAM

PETIGRU DRIVE
PLAN AND PROFILE SHEET

SCALE 1" = 20' HOR. 1" = 2' VER.

STATE	COUNTY	D&F PROJECT NO.	ROAD NAME	SHEET NO.	TOTAL SHEETS
S.C.	GEORGETOWN	31519.11	PETIGRU DRIVE	10	

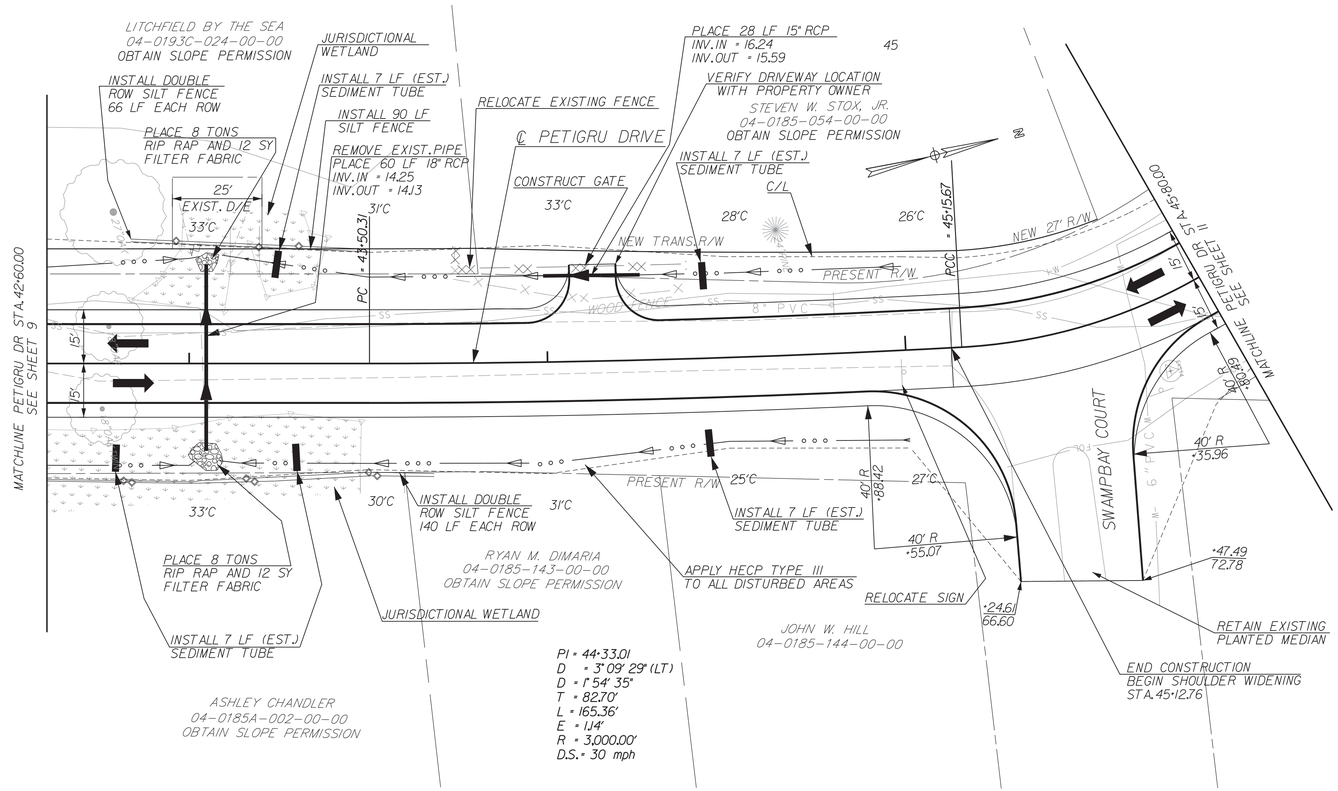

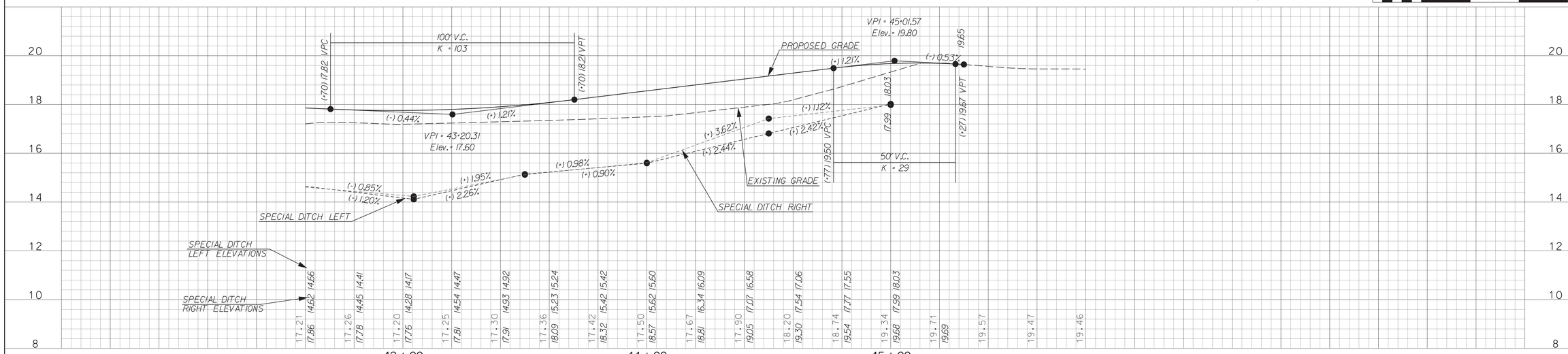

DAVIS & FLOYD, INC. No. C00538 — SOUTH CAROLINA CERTIFICATE OF AUTHORIZATION

SOUTH CAROLINA PROFESSIONAL ENGINEER No. 20214 — 4/3/2018 — GEORGE TILLEY BULL

DAVIS & FLOYD

SINCE 1954

WWW.DAVISFLOYD.COM

3229 W. MONTAGUE AVENUE
NORTH CHARLESTON, SC 29418
(843) 554-8802

REV. NO.	BY	DATE	DESCRIPTION OF REVISION
4			
3			
2			
1			

DGN. AMS DATE
R/W DATE
CHK. GTB DATE

GEORGETOWN COUNTY
ENGINEERED ROADS PROGRAM

PETIGRU DRIVE
PLAN AND PROFILE SHEET

SCALE 1" = 20' HOR. 1" = 2' VER.

STATE	COUNTY	D&F PROJECT NO.	ROAD NAME	SHEET NO.	TOTAL SHEETS
S.C.	GEORGETOWN	31519.11	PETIGRU DRIVE	11	

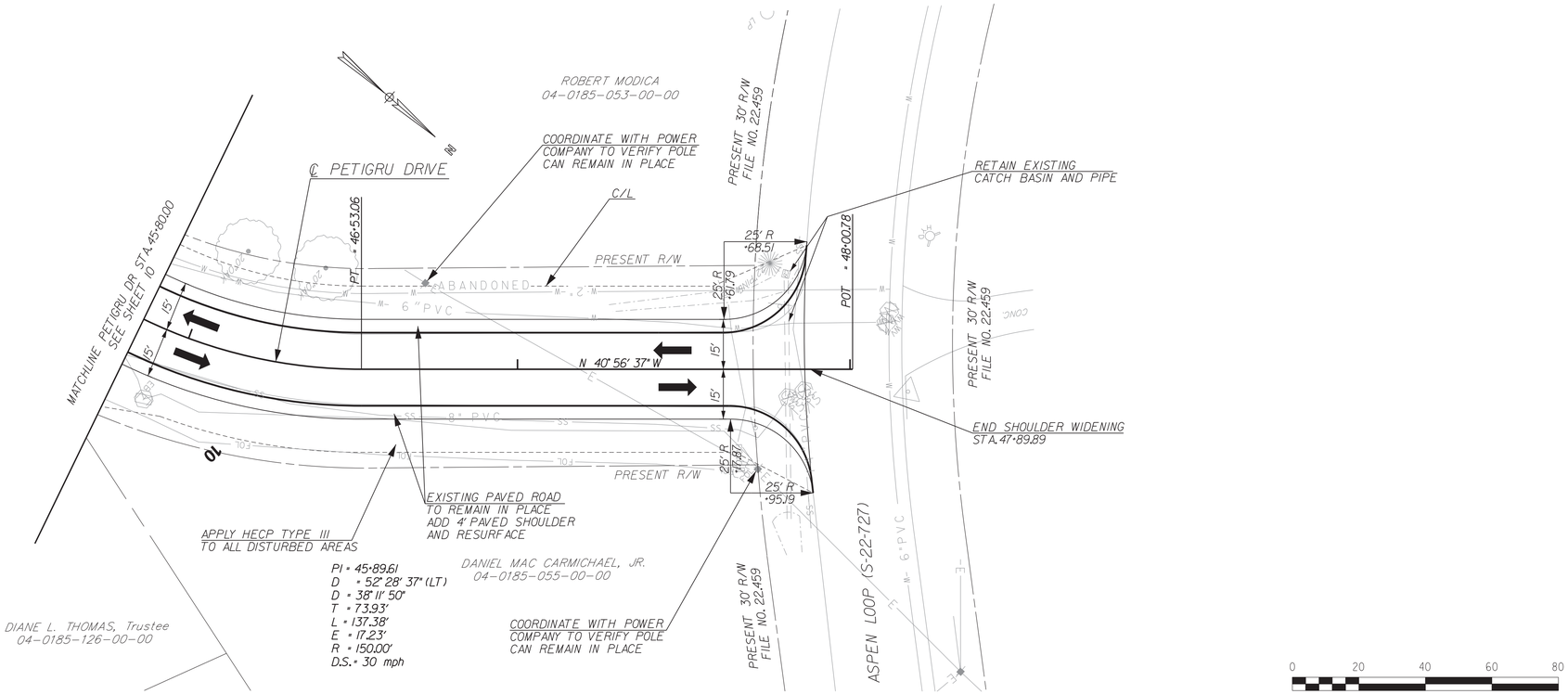

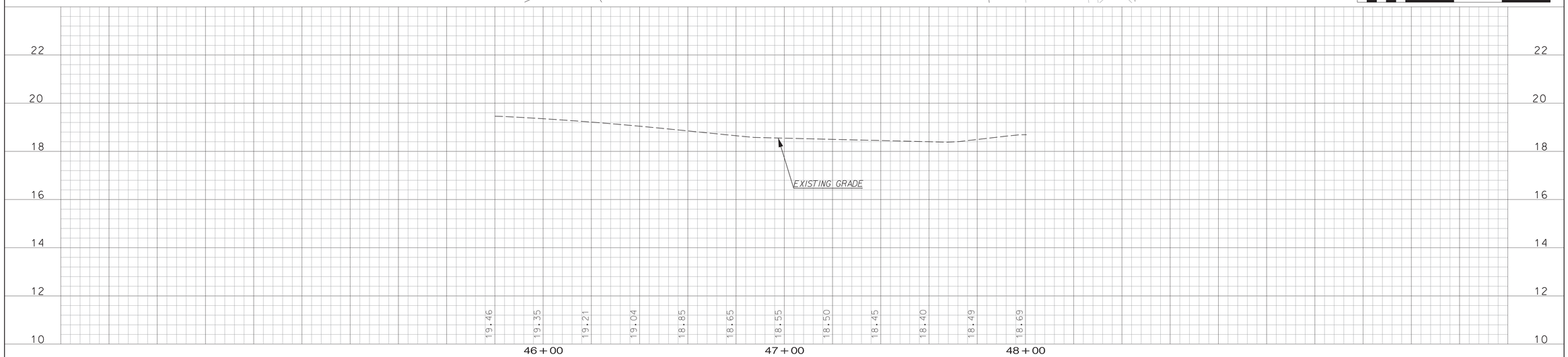

SOUTH CAROLINA DAVIS & FLOYD, INC. No. C00538 CERTIFICATE OF AUTHORIZATION

SOUTH CAROLINA PROFESSIONAL ENGINEER No 20214 4/3/2018 GEORGE TILLEY BULL

DAVIS & FLOYD

SINCE 1954

WWW.DAVISFLOYD.COM

3229 W. MONTAGUE AVENUE
NORTH CHARLESTON, SC 29418
(843) 554-8162

REV. NO.	BY	DATE	DESCRIPTION OF REVISION
4			
3			
2			
1			

DGN. AMS DATE
R/W DATE
CHK. GTB DATE

GEORGETOWN COUNTY
ENGINEERED ROADS PROGRAM

PETIGRU DRIVE
PLAN AND PROFILE SHEET

SCALE 1" = 20' HOR. 1" = 2' VER.

STATE	COUNTY	D&F PROJECT NO.	ROAD NAME	SHEET NO.	TOTAL SHEETS
S.C.	GEORGETOWN	31519.11	PETIGRU DRIVE	PM1	

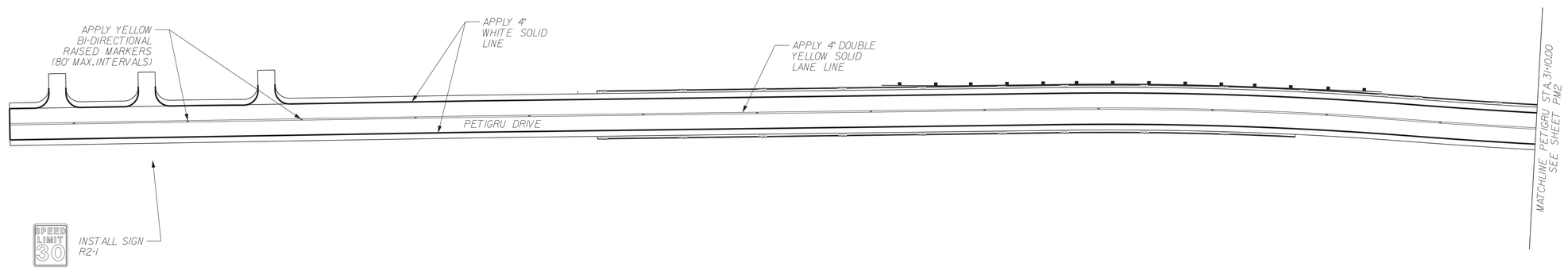

SOUTH CAROLINA
DAVIS & FLOYD, INC.
No. C00538
CERTIFICATE OF AUTHORIZATION

SOUTH CAROLINA
PROFESSIONAL ENGINEER
4/13/18
No. 20214
GEORGE TILLEY BULL

DAVIS & FLOYD

SINCE 1954

WWW.DAVISFLOYD.COM

3229 W. MONTAGUE AVENUE
NORTH CHARLESTON, SC 29418
(843) 554-8102

REV. NO.	BY	DATE	DESCRIPTION OF REVISION
4			
3			
2			
1			

DGN. AMS DATE
R/W DATE
CHK. GTB DATE

GEORGETOWN COUNTY
ENGINEERED ROADS PROGRAM

PETIGRU DRIVE

SIGNING AND PAVEMENT MARKING PLAN SHEET

SCALE 1"= 40'

STATE	COUNTY	D&F PROJECT NO.	ROAD NAME	SHEET NO.	TOTAL SHEETS
S.C.	GEORGETOWN	31519.11	PETIGRU DRIVE	PM2	

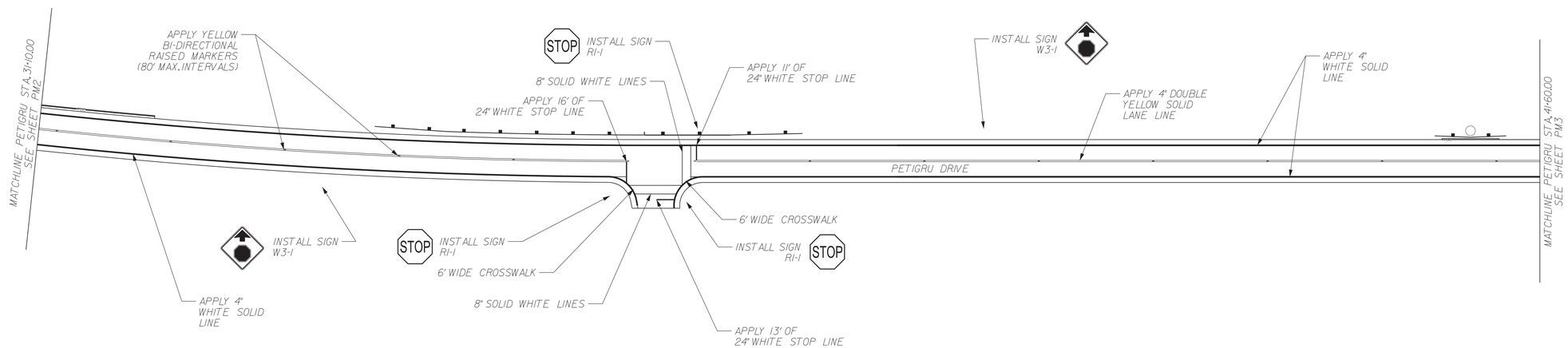

DAVIS & FLOYD, INC.
No. C00538
CERTIFICATE OF AUTHORIZATION
SOUTH CAROLINA

SOUTH CAROLINA
REGISTERED PROFESSIONAL ENGINEER
4/16/18
No. 20214
GEORGE TILLEY BAILEY

DAVIS & FLOYD

SINCE 1954

WWW.DAVISFLOYD.COM

3229 W. MONTAGUE AVENUE
NORTH CHARLESTON, SC 29418
(843) 554-8601

REV. NO.	BY	DATE	DESCRIPTION OF REVISION
4			
3			
2			
1			

DGN. AMS DATE
R/W DATE
CHK. GTB DATE

GEORGETOWN COUNTY
ENGINEERED ROADS PROGRAM

PETIGRU DRIVE

SIGNING AND PAVEMENT MARKING
PLAN SHEET

SCALE 1"= 40'

STATE	COUNTY	D&F PROJECT NO.	ROAD NAME	SHEET NO.	TOTAL SHEETS
S.C.	GEORGETOWN	31519.11	PETIGRU DRIVE	PM3	

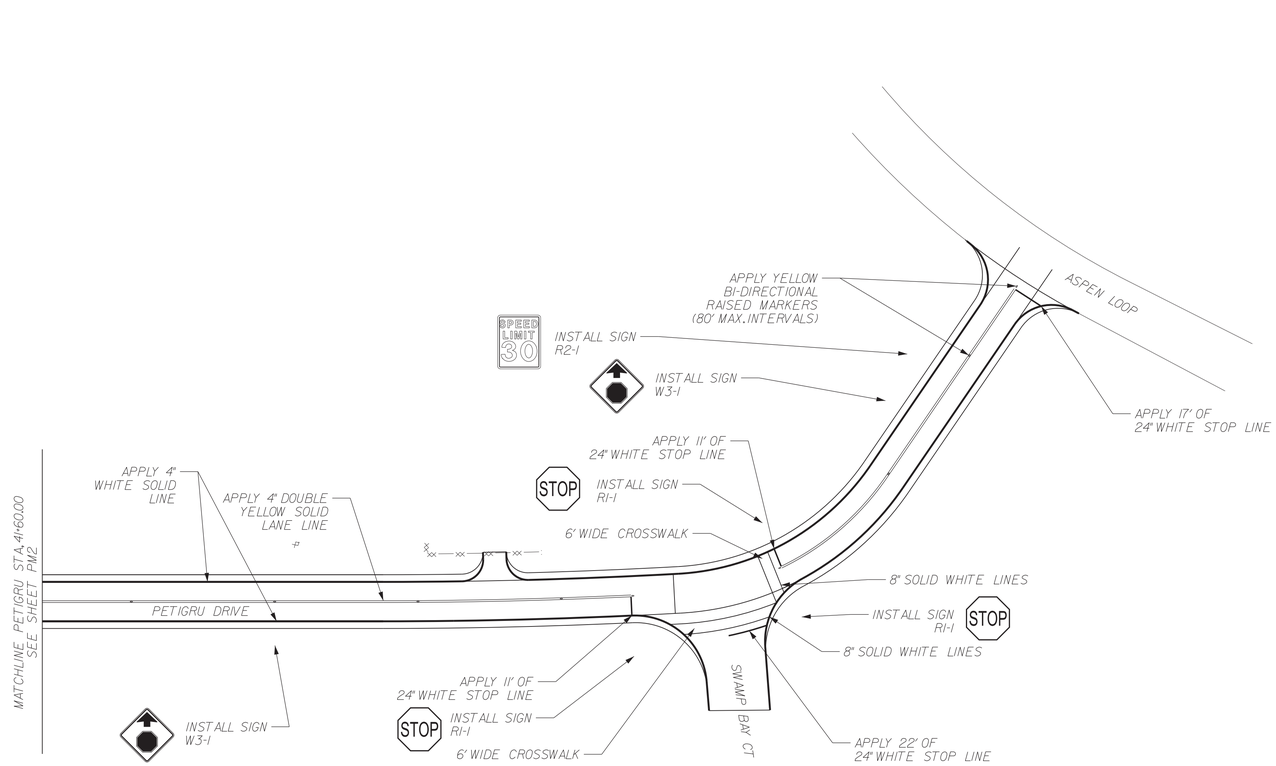

DAVIS & FLOYD, INC. SOUTH CAROLINA No. C00538 CERTIFICATE OF AUTHORIZATION

SOUTH CAROLINA PROFESSIONAL ENGINEER REGISTERED 4/16/18 No. 20214 GEORGE TILLEY BUTLER III

DAVIS & FLOYD

SINCE 1954

WWW.DAVISFLOYD.COM

3229 W. MONTAGUE AVENUE
NORTH CHARLESTON, SC 29418
(843) 554-8802

REV. NO.	BY	DATE	DESCRIPTION OF REVISION
4			
3			
2			
1			

DGN. AMS DATE
R/W DATE
CHK. GTB DATE

GEORGETOWN COUNTY
ENGINEERED ROADS PROGRAM

PETIGRU DRIVE

SIGNING AND PAVEMENT MARKING PLAN SHEET

SCALE 1"= 40'

STATE	COUNTY	D&F PROJECT NO.	ROAD NAME	SHEET NO.	TOTAL SHEETS
S.C.	GEORGETOWN	31519.11	PETIGRU DRIVE	EC01	

SEEDING INSTALLATION

A. Seed all disturbed areas of construction (excluding riprap lined ditches).

B. No seeding should be undertaken in windy or unfavorable weather, when the ground is too wet to rake easily, when it is in a frozen condition, or too dry.

C. The subgrade of all areas to be seeded shall be raked and all rubbish, sticks, roots, and stones larger than 2 IN shall be removed.

D. Fertilizer shall be uniformly spread and disked or roto-tilled to a depth of at least 4 IN.

E. Immediately following this preparation the seed shall be uniformly applied and lightly raked into the surface. Lightly roll the surface and water with fine spray. Seed shall be applied, depending on the period of year, at the rates indicated in Section 810 of the SCDOT Standard Specifications for Highway Construction (Edition 2007).

All seeded areas shall be mulched with clean small-grain straw at a rate of 1½ to 2 tons per acre. Asphalt emulsion shall be applied uniformly at a rate of 300 GAL per acre to tack the mulch, unless otherwise shown on the plans. Mechanical tacking will be considered on a case-by-case basis as approved by the Engineer.

F. All seeded areas shall be watered and maintained in good condition. Reseeding shall be done if and when necessary until a good, healthy, uniform growth is established over the entire area seeded.

G. Slopes shall be protected against washouts by an approved method. Any washout which occurs shall be regraded and reseeded until good sod is established.

SEQUENCE OF CONSTRUCTION

A. Obtain all permits.

B. Contact the office of Ocean and Coastal Resource Management (OCRM) at (843)744-5838 prior to commencing construction activities.

C. Install sediment erosion controls as follows:

1. Silt Fences shall be used to prevent silt from leaving the limits of construction.
2. Stabilized Graveled Construction Entrances shall be used at locations where construction vehicles access public non-construction areas. Vehicles shall be washed down as necessary to prevent tracking of silt off-site.
3. A temporary rock filter dam or sediment tube shall be used as ditch checks as directed by the Engineer.
4. Adhere to all of the OCRM Standard Notes listed on the right of this sheet and install BMP's per the SCDOT Standard Drawings for Erosion Control.

D. A recommended sequence of construction follows:

1. Clear and grub only areas necessary for perimeter erosion and sediment control, silt fence, hay bales, and temporary sediment traps.
2. Construct perimeter controls.
3. Construct new drainage appurtenances within the areas protected by perimeter controls.
4. Install protection around inlets and stabilize disturbed areas as soon as possible (within 7 calendar days).
5. Proceed with construction. Limit disturbed areas to areas with work in progress to limit disruption to traffic. Schedule work to maintain access to all driveways as long as possible.
6. Erosion controls may be removed after the area contributing flow to that particular erosion control device has been stabilized.
7. Stabilize all remaining areas.
8. Clean out temporary sediment control as needed; check controls every seven (7) days.
9. Remove sediment controls 30 days after all disturbed areas have stabilized.

E. Submit Notice of Termination to SCDHEC.

STANDARD NOTES

1. If necessary, slopes which exceed eight (8) feet should be stabilized with synthetic or vegetative mats, in addition to hydroseeding. It may be necessary to install temporary slope drains during construction. Temporary berms may be needed until the slope is brought to grade.
2. Stabilization measures shall be initiated as soon as practicable in portions of the site where construction activities have temporarily or permanently ceased, but in no case more than fourteen (14) days after work has ceased, except as stated below:
   •Where stabilization by the 14th day is precluded by snow cover or frozen ground conditions stabilization measures must be initiated as soon as practicable.
   •Where construction activity on a portion of the site is temporarily ceased, and earth disturbing activities will be resumed within 14 days, temporary stabilization measures do not have to be initiated on that portion of the site.
3. All sediment and erosion control devices shall be inspected once every calendar week. If periodic inspection or other information indicates that a BMP has been inappropriately or incorrectly installed, the Permittee must address the necessary replacement or modification required to correct the BMP within 48 hours of identification
4. Provide silt fence and or other control devices, as may be required, to control soil erosion during utility construction. All disturbed areas shall be cleaned, graded, and stabilized immediately after the utility installation. Fill, cover, and temporary seeding at the end of each day are recommended. If water is encountered while trenching, the water should be filtered to remove any sediments before being pumped back into any waters of the state.
5. All erosion control devices shall be properly maintained during all phases of construction until the completion of all construction activities and all disturbed areas have been stabilized. Additional control devices may be required during construction in order to control erosion and or offsite sedimentation. All temporary control devices shall be removed once construction is complete and the site is stabilized.
6. The contractor must take necessary action to minimize the tracking of mud onto paved roadway(s) from the construction area and the generation of dust. The contractor shall daily remove mud/soil from pavement, as may be required.
7. Residential subdivisions require erosion control features for infrastructure as well as for individual lot construction. Individual property owners shall follow these plans during construction or obtain approval of an individual plan in accordance with S.C. REG. 72-300 ET SEQ. and SCR100000.
8. Temporary diversion berms and or ditches will be provided as needed during construction to protect work areas from upslope runoff and or to divert sediment-laden water to appropriate traps or stable outlets.
9. All waters of the state (WOS), including wetlands, are to be flagged or otherwise clearly marked in the field. A double row of silt fence is to be installed in all areas where a 50-foot buffer can't be maintained between the disturbed area and all WOS. A 10-foot buffer should be maintained between the last row of silt fence and all WOS.
10. Litter, construction debris, oils, fuels, and building products with significant potential for impact (such as stockpiles of freshly treated lumber) and construction chemicals that could be exposed to storm water must be prevented from being a pollutant source in storm water discharges.
11. A copy of the SWPPP, inspection records, and rainfall data must be retained at the construction site or a nearby location easily accessible during normal business hours, from the date of commencement of construction activities to the date that final stabilization is reached.
12. Initiate stabilization measures on any exposed steep slope (3H:1V or greater) where land-disturbing activities have permanently or temporarily ceased, and will not resume for a period of 7 calendar days.
13. Minimize soil compaction and, unless infeasible, preserve topsoil.
14. Minimize the discharge of pollutants from equipment and vehicle washing, wheel wash water, and other wash waters. Wash waters must be treated in a sediment basin or alternative control that provides equivalent or better treatment prior to discharge.
15. Minimize the discharge of pollutants from dewatering of trenches and excavated areas. These discharges are to be routed through appropriate BMPs (sediment basin, filter bag, etc.).
16. The following discharges from sites are prohibited:
    - Wastewater from washout of concrete, unless managed by an appropriate control;
    - Wastewater from washout and cleanout of stucco, paint, form release oils, curing compounds and other construction materials;
    - Fuels, oils, or other pollutants used in vehicle and equipment operation and maintenance; and
    - Soaps or solvents used in vehicle and equipment washing.
17. After construction activities begin, inspections must be conducted at a minimum of at least once every calendar week and must be conducted until final stabilization is reached on all areas of the construction site.
18. If existing BMPs need to be modified or if additional BMPs are necessary to comply with the requirements of this permit and/or SC's Water Quality Standards, implementation must be completed before the next storm event whenever practicable. If implementation before the next storm event is impracticable, the situation must be documented in the SWPPP and alternative BMPs must be implemented as soon as reasonably possible.
19. A Pre-Construction Conference must be held for each construction site with an approved On-Site SWPPP prior to the implementation of construction activities. For non-linear projects that disturb 10 acres or more this conference must be held on-site unless the Department has approved otherwise.

STANDARD EROSION CONTROL DRAWINGS

SEE DETAIL SHEETS FOR EROSION CONTROL DRAWINGS

SOUTH CAROLINA DAVIS & FLOYD, INC. No. C00538 CERTIFICATE OF AUTHORIZATION

SOUTH CAROLINA PROFESSIONAL ENGINEER 2/15/18 No. 20214 GEORGE TILLEY BULLOCK JR.

DAVIS & FLOYD

SINCE 1954

WWW.DAVISFLOYD.COM

3229 W. MONTAGUE AVENUE NORTH CHARLESTON, SC 29418 (843) 554-8062

REV. NO.	BY	DATE	DESCRIPTION OF REVISION
4			
3			
2			
1			

DGN. AMS DATE
R/W DATE
CHK. GTB DATE

GEORGETOWN COUNTY
ENGINEERED ROADS PROGRAM

PETIGRU DRIVE
EROSION CONTROL NOTES

STATE	COUNTY	D&F PROJECT NO.	ROAD NAME	SHEET NO.	TOTAL SHEETS
S.C.	GEORGETOWN	31519.11	PETIGRU DRIVE	XI	

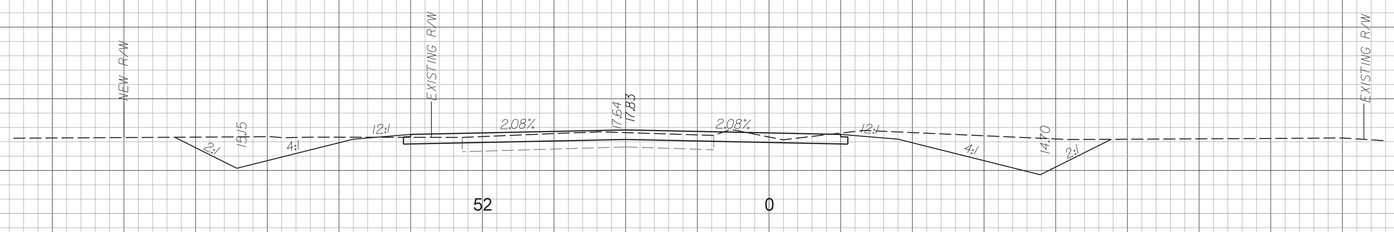

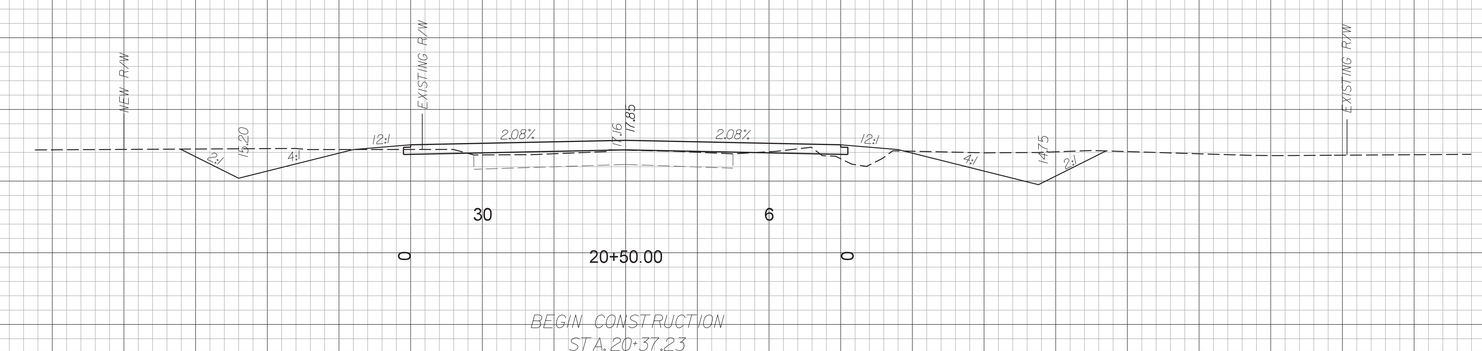

SOUTH CAROLINA
DAVIS & FLOYD, INC.
No. C00538
CERTIFICATE OF AUTHORIZATION

SOUTH CAROLINA
REGISTERED PROFESSIONAL ENGINEER
No. 20214
4/3/2018
GEORGE TILLEY BULL JR.

PLOTTED: 3/20/2018 9:57:13 AM FILE NAME: \\CHS-FS1\Data\Jobs\Data\31519-05\Production\Transportation\XS\County Petigru\31519ii XS.dgn

STATE	COUNTY	D&F PROJECT NO.	ROAD NAME	SHEET NO.	TOTAL SHEETS
S.C.	GEORGETOWN	31519.11	PETIGRU DRIVE	X2	

DAVIS & FLOYD, INC.
No. C00538
CERTIFICATE OF AUTHORIZATION

SOUTH CAROLINA
PROFESSIONAL ENGINEER
No. 20214
4/3/2018
GEORGE TILLEY BULLOCK

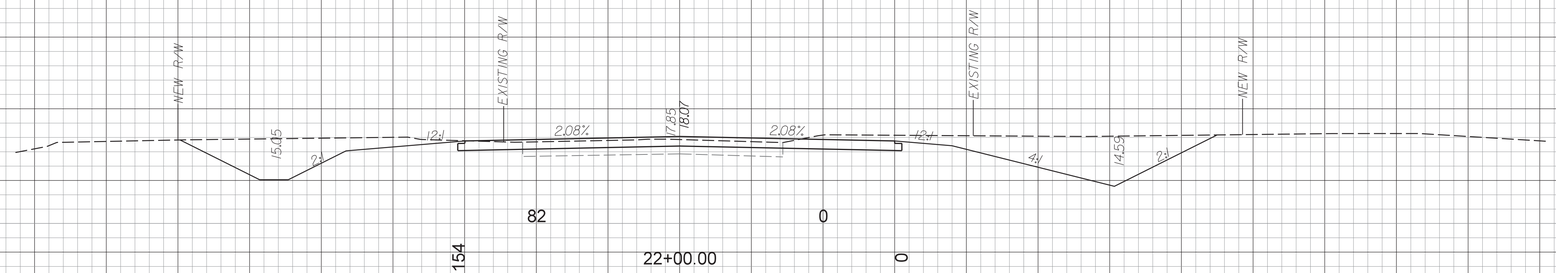

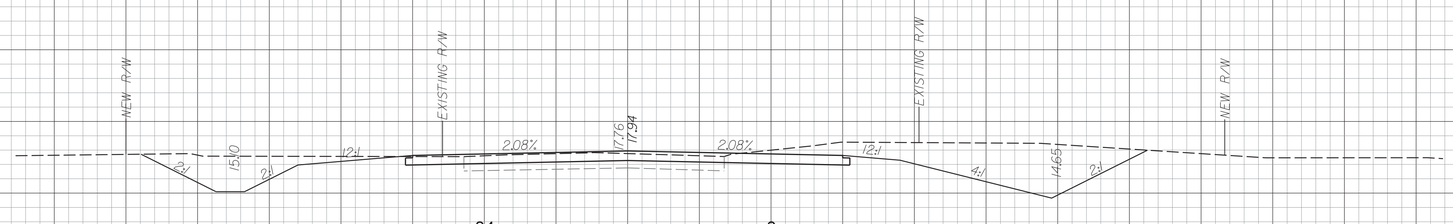

5
5

PLOTTED: 3/20/2018 9:57:14 AM FILE NAME: \\CHS-FS1\Data\JobsData\31519-05\Production\Transportation\SC\County Petigru\31519ILXS.dgn

STATE	COUNTY	D&F PROJECT NO.	ROAD NAME	SHEET NO.	TOTAL SHEETS
S.C.	GEORGETOWN	31519.11	PETIGRU DRIVE	X3	

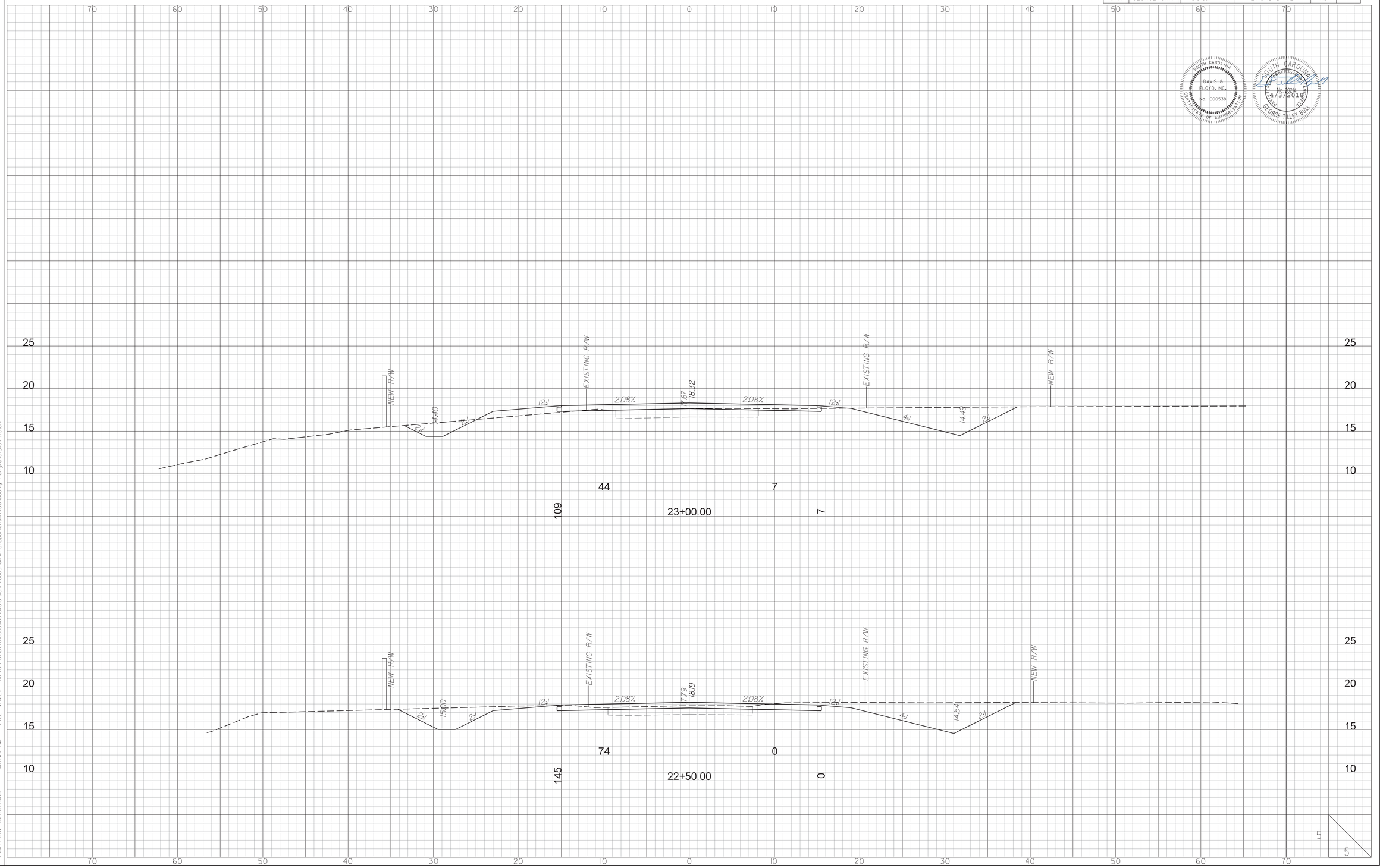

SOUTH CAROLINA
DAVIS & FLOYD, INC.
No. C00538
CERTIFICATE OF AUTHORIZATION
SOUTH CAROLINA
REGISTERED PROFESSIONAL ENGINEER
No. 20214
4/3/2018
GEORGE TILLEY BULLOCK

PLOTTED: 3/20/2018 9:57:14 AM FILE NAME: \\CHS-FS\Data\Jobs\Data\31519-05\Production\Transportation\XS\County Petigru\31519ii XS.dgn

STATE	COUNTY	D&F PROJECT NO.	ROAD NAME	SHEET NO.	TOTAL SHEETS
S.C.	GEORGETOWN	315191.11	PETIGRU DRIVE	X4	

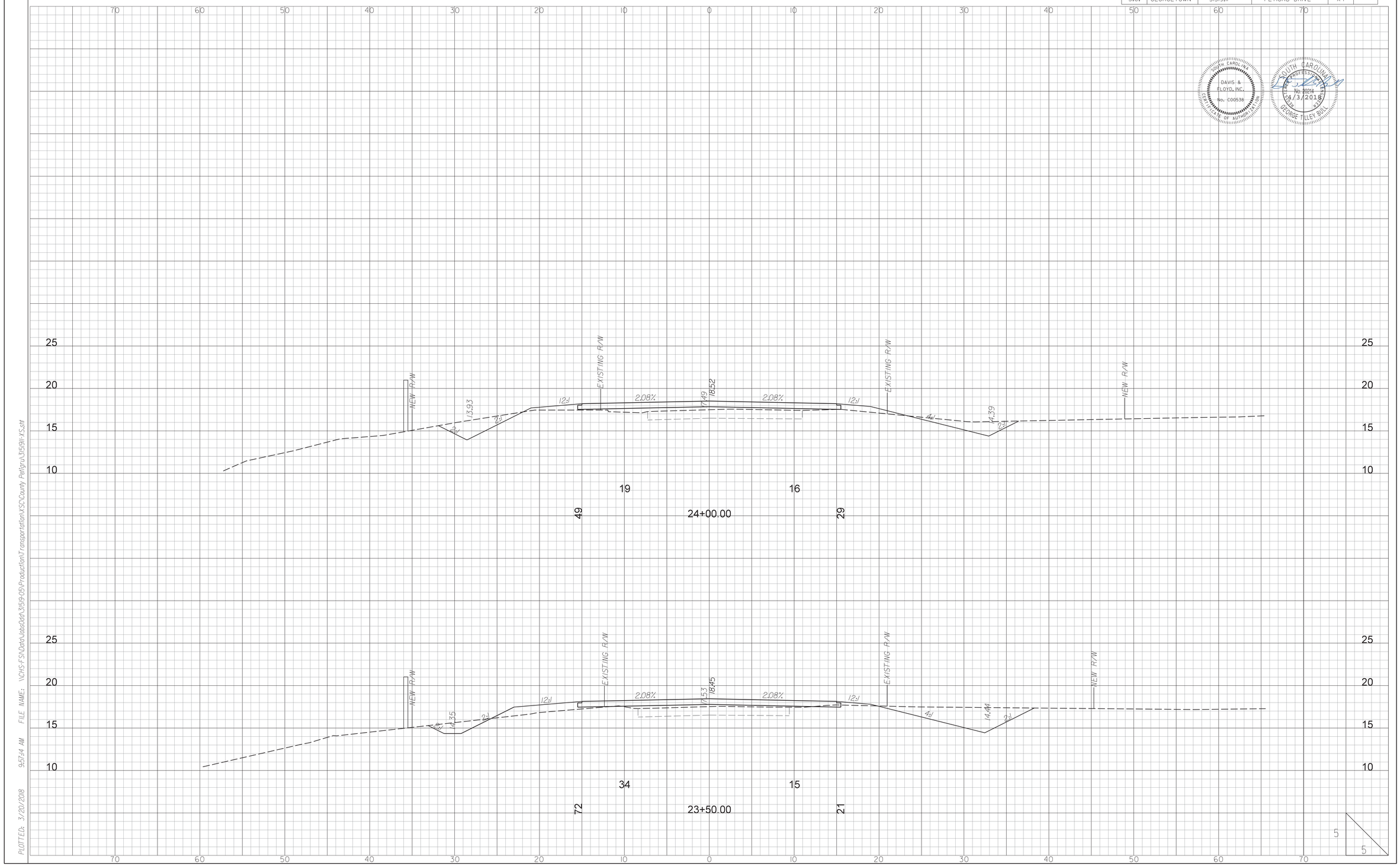

DAVIS & FLOYD, INC. No. C00538 CERTIFICATE OF AUTHORIZATION

SOUTH CAROLINA REGISTERED PROFESSIONAL ENGINEER No. 20214 3/3/2018 GEORGE TILLEY BULLOCK

PLOTTED: 3/20/2018 9:57:14 AM FILE NAME: \\DHS-FS\Data\JobsData\315191-05\Production\Transportation\SC\County Petigru\315191XS.dgn

STATE	COUNTY	D&F PROJECT NO.	ROAD NAME	SHEET NO.	TOTAL SHEETS
S.C.	GEORGETOWN	315191.11	PETIGRU DRIVE	X5	

DAVIS & FLOYD, INC.
No. C00538
CERTIFICATE OF AUTHORIZATION

SOUTH CAROLINA PROFESSIONAL ENGINEER
No. 20214
3/3/2018
GEORGE TILLEY BULLOCK

PLOTTED: 3/20/2018 9:57:45 AM FILE NAME: \\CHS-FS\Data\Jobs0ldr\315191-05\Production\Transportation\XSs\County Petigru\315191XS.dgn

STATE	COUNTY	D&F PROJECT NO.	ROAD NAME	SHEET NO.	TOTAL SHEETS
S.C.	GEORGETOWN	315191.11	PETIGRU DRIVE	X6	

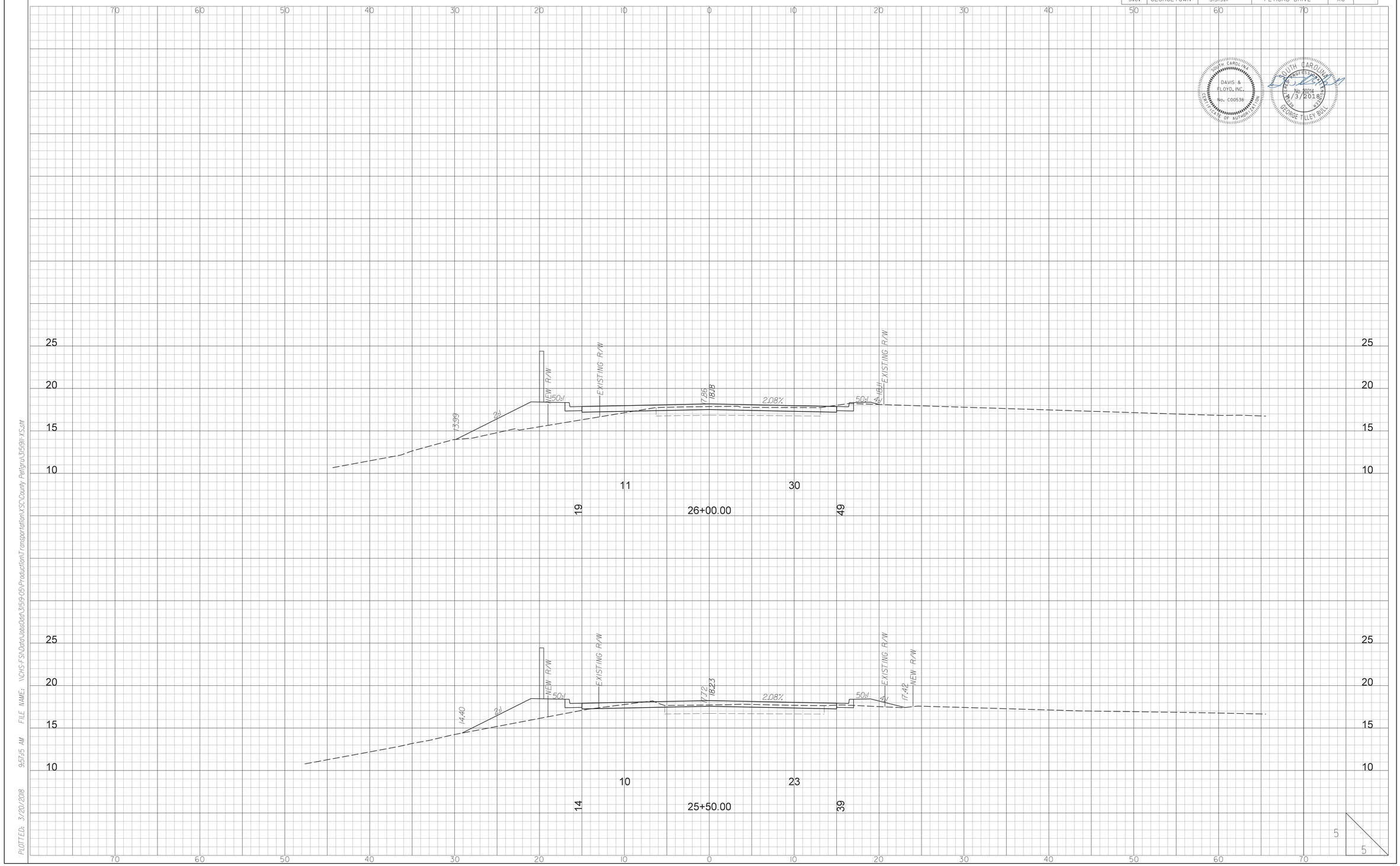

SOUTH CAROLINA
DAVIS & FLOYD, INC.
No. C00538
CERTIFICATE OF AUTHORIZATION

SOUTH CAROLINA
REGISTERED PROFESSIONAL ENGINEER
No. 20214
3/3/2018
GEORGE TILLEY BULLOCK

PLOTTED: 3/20/2018 9:57:45 AM FILE NAME: \\CHS-FS\Data\Jobs\Data\315191-05\Production\Transportation\XS\County Petigru\315191XS.dgn

STATE	COUNTY	D&F PROJECT NO.	ROAD NAME	SHEET NO.	TOTAL SHEETS
S.C.	GEORGETOWN	31519.11	PETIGRU DRIVE	X7	

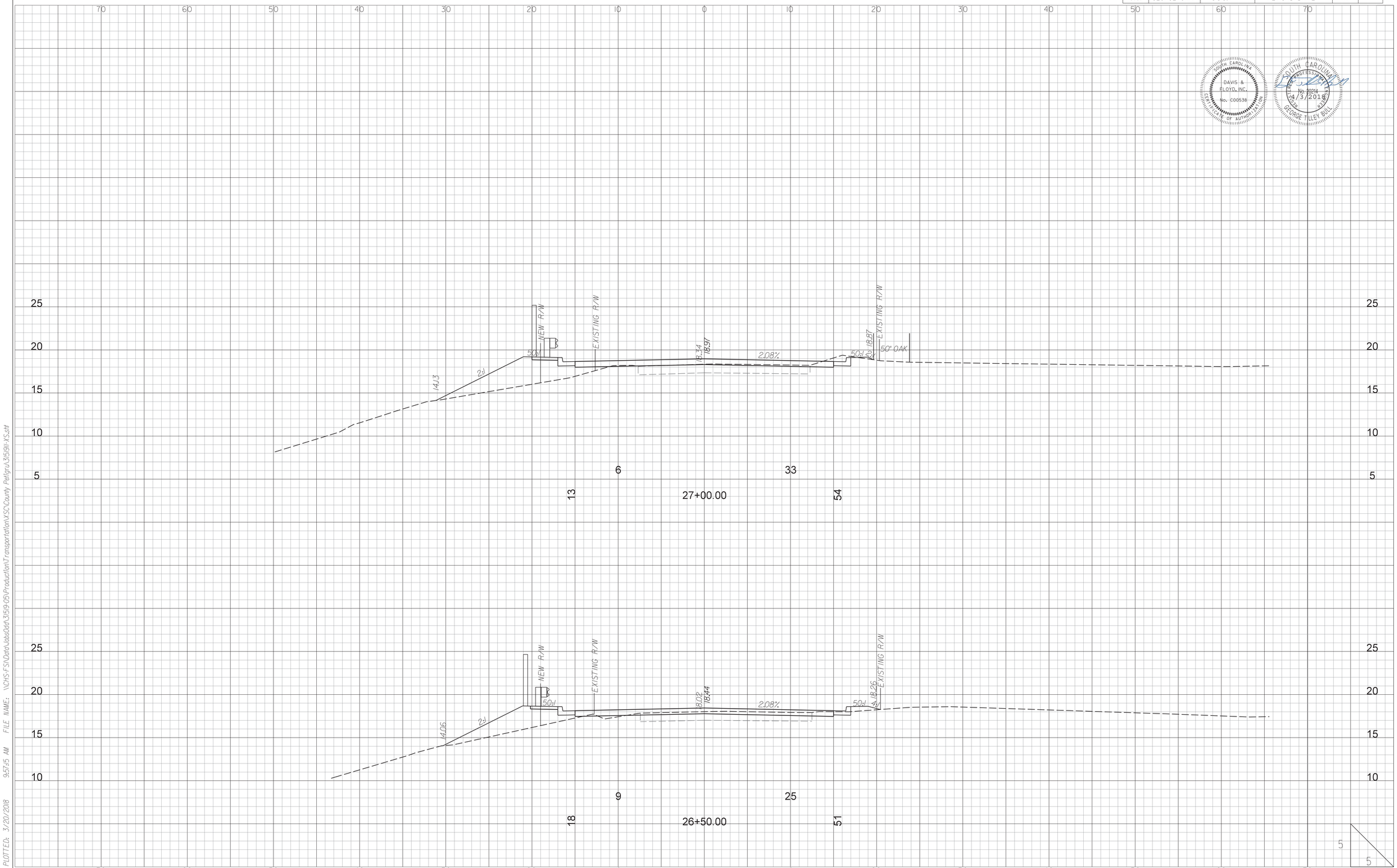

SOUTH CAROLINA
DAVIS & FLOYD, INC.
No. C00536
CERTIFICATE OF AUTHORIZATION

SOUTH CAROLINA
REGISTERED PROFESSIONAL ENGINEER
No. 20214
4/3/2018
GEORGE TILLEY BULLOCK

PLOTTED: 3/20/2018 9:57:45 AM FILE NAME: \\CHS-FS\Data\Jobs\Data\31519-05\Production\Transportation\SC\County Petigru\31519ILXS.dgn

STATE	COUNTY	D&F PROJECT NO.	ROAD NAME	SHEET NO.	TOTAL SHEETS
S.C.	GEORGETOWN	315191.11	PETIGRU DRIVE	X8	

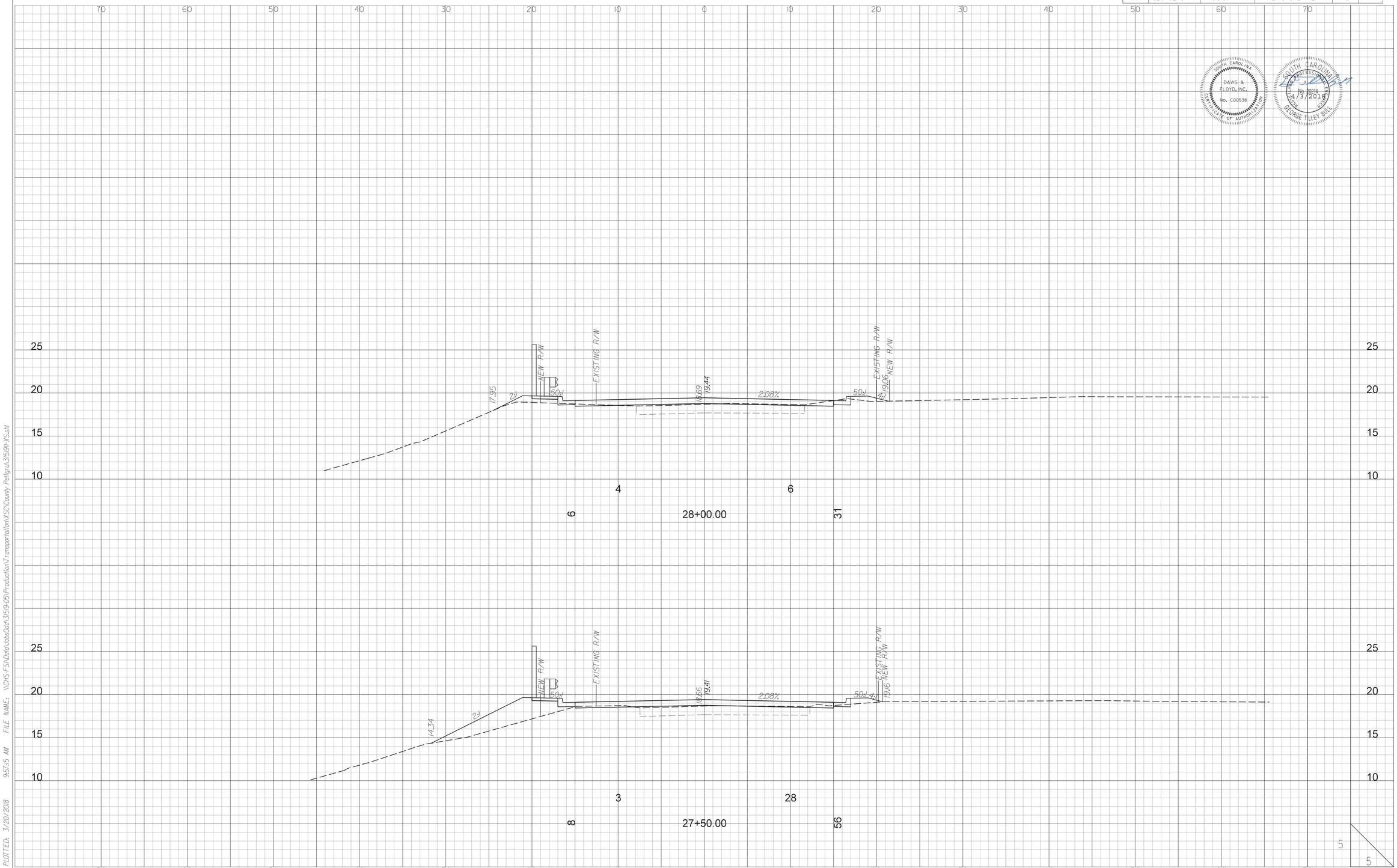

STATE	COUNTY	D&F PROJECT NO.	ROAD NAME	SHEET NO.	TOTAL SHEETS
S.C.	GEORGETOWN	315191.11	PETIGRU DRIVE	X9	

DAVIS & FLOYD, INC.
No. C00538
CERTIFICATE OF AUTHORIZATION

SOUTH CAROLINA
REGISTERED PROFESSIONAL ENGINEER
No. 20214
4/3/2018
GEORGE TILLEY BULLOCK JR.

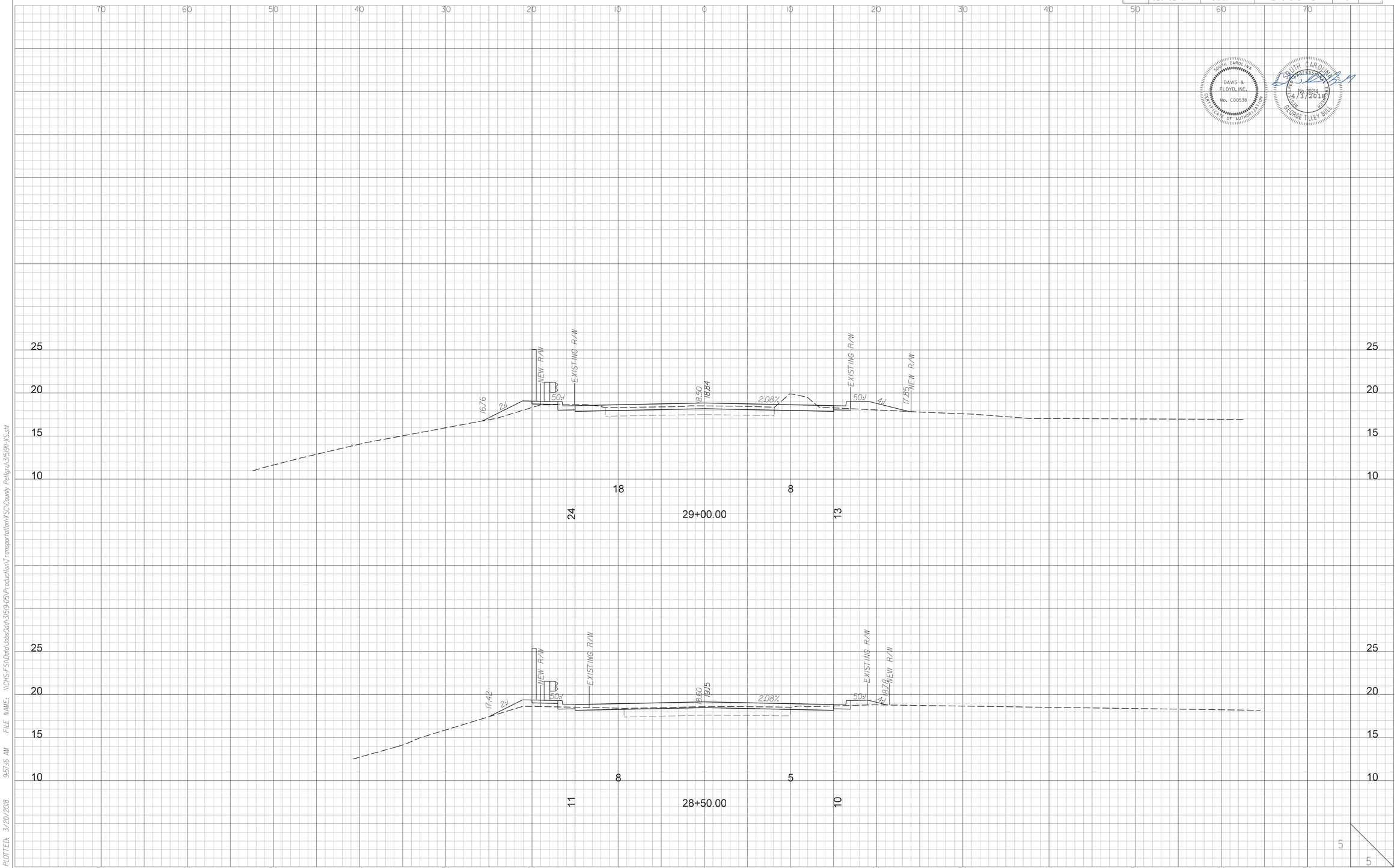

PLOTTED: 3/20/2018 9:57:46 AM FILE NAME: \\DHS-FS1\Data\Jobs\Data\315191-05\Production\Transportation\XS\County Petigru\315191XS.dgn

STATE	COUNTY	D&F PROJECT NO.	ROAD NAME	SHEET NO.	TOTAL SHEETS
S.C.	GEORGETOWN	315191.11	PETIGRU DRIVE	X10	

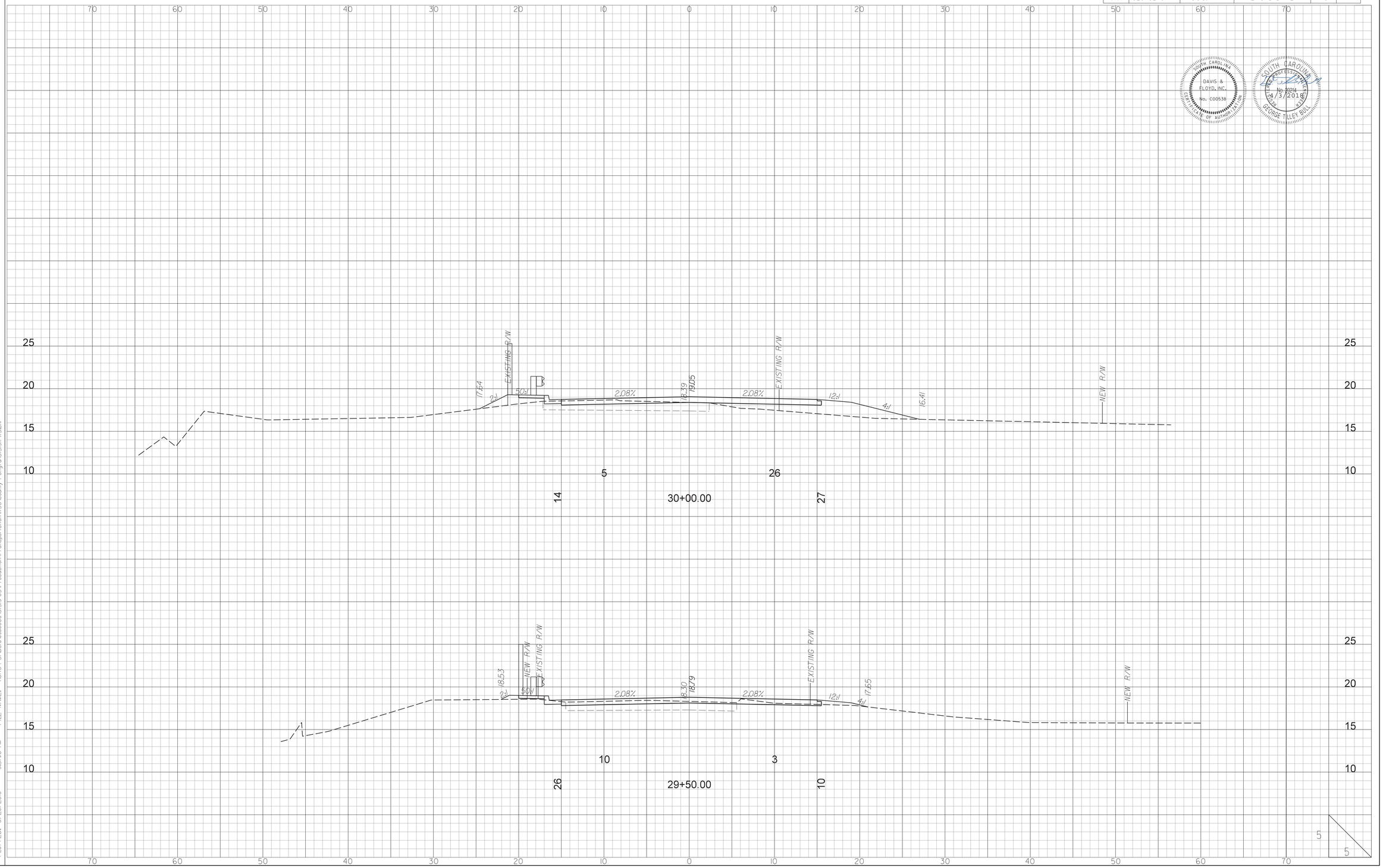

DAVIS & FLOYD, INC. No. C00538 CERTIFICATE OF AUTHORIZATION

SOUTH CAROLINA REGISTERED PROFESSIONAL ENGINEER No. 20214 GEORGE TILLEY BULLOCK 4/3/2018

PLOTTED: 3/20/2018 9:57:46 AM FILE NAME: \\CHS-FS1\Data\JobsData\315191-05\Production\Transportation\SC\County Petigru\315191XS.dgn

STATE	COUNTY	D&F PROJECT NO.	ROAD NAME	SHEET NO.	TOTAL SHEETS
S.C.	GEORGETOWN	315191.11	PETIGRU DRIVE	XII	

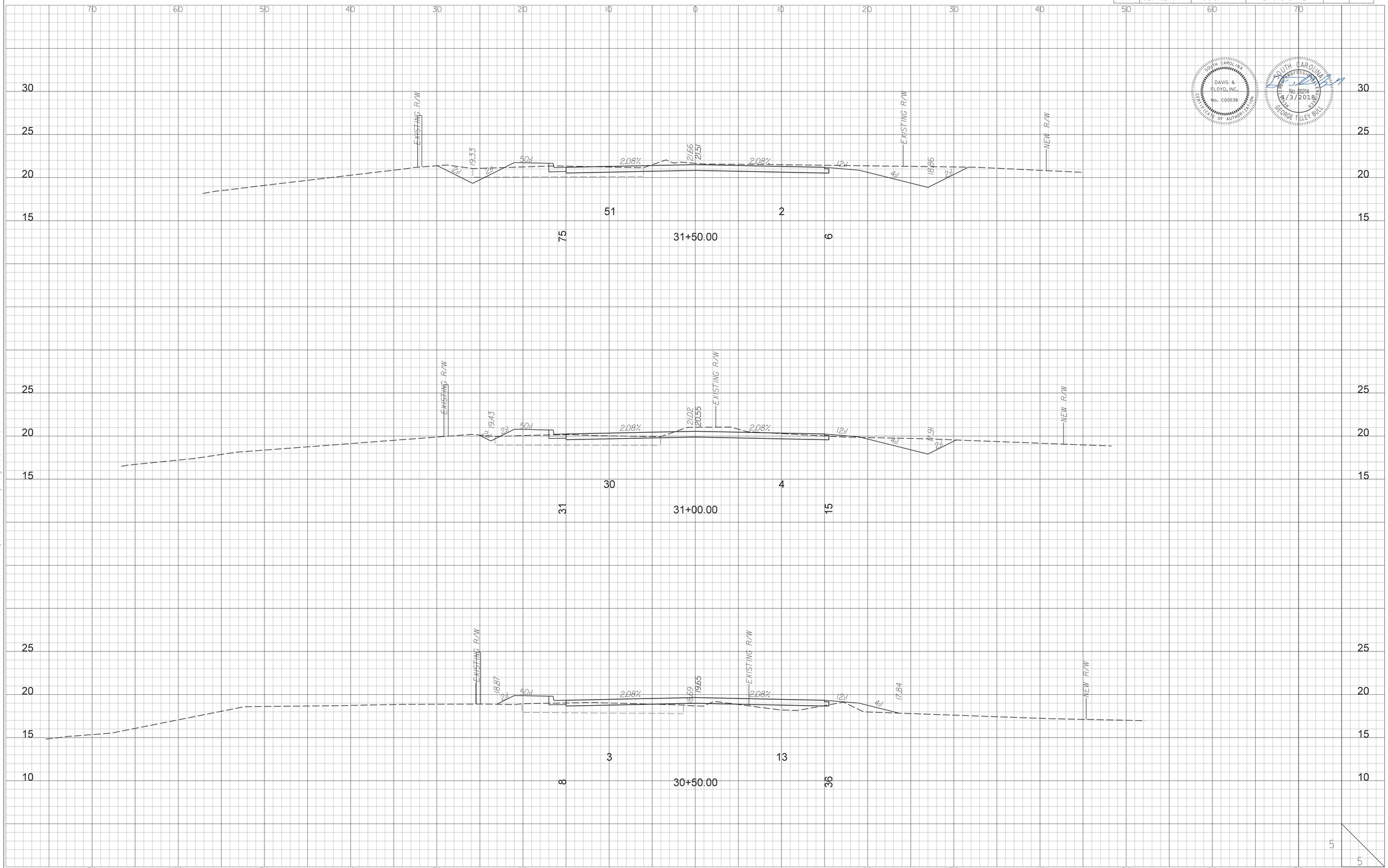

PLOTTED: 3/20/2018 9:57:46 AM FILE NAME: \\DHS-FS1\Data\JobsData\315191-05\Production\Transportation\XS\County Petigru\315191XS.dgn

5

5

STATE	COUNTY	D&F PROJECT NO.	ROAD NAME	SHEET NO.	TOTAL SHEETS
S.C.	GEORGETOWN	315191.11	PETIGRU DRIVE	X12	

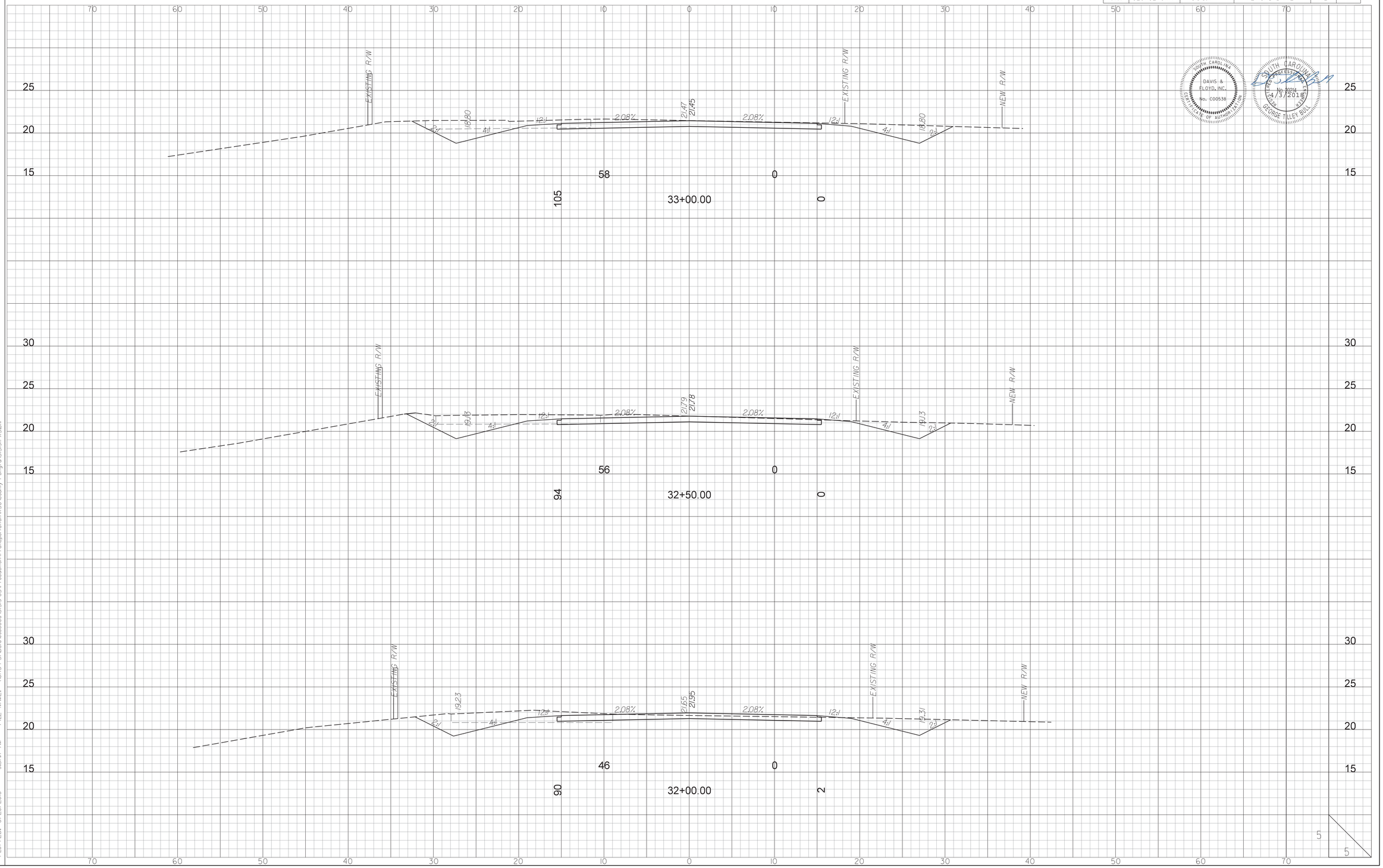

PLOTTED: 3/20/2018 9:57:47 AM FILE NAME: \\CHS-FS1\Data\Jobs\Data\315191-05\Production\Transportation\SC\County Petigru\315191XS.dgn

STATE	COUNTY	D&F PROJECT NO.	ROAD NAME	SHEET NO.	TOTAL SHEETS
S.C.	GEORGETOWN	315191.11	PETIGRU DRIVE	X13	

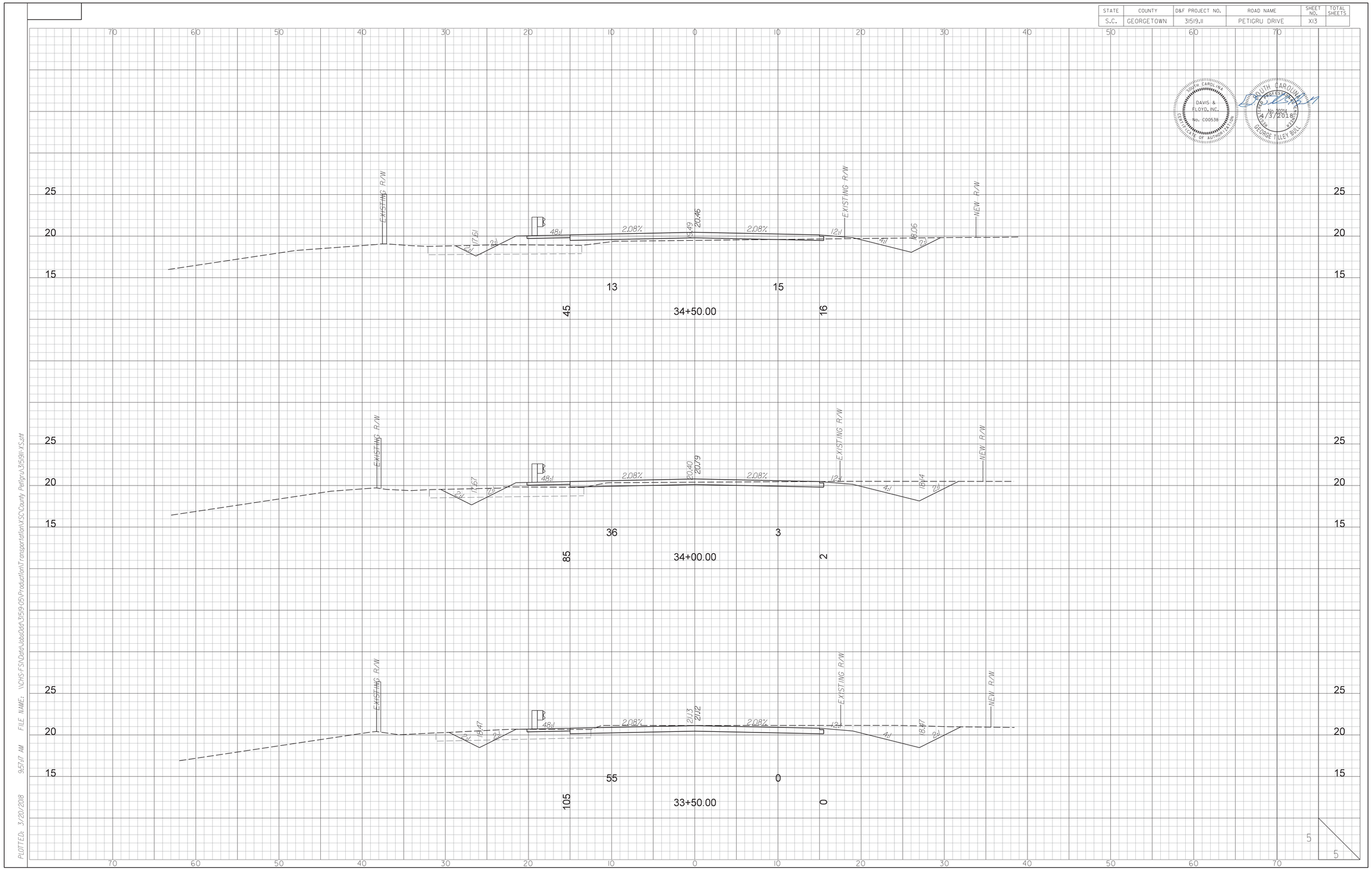

SOUTH CAROLINA
DAVIS & FLOYD, INC.
No. C00536
CERTIFICATE OF AUTHORIZATION
SOUTH CAROLINA
REGISTERED PROFESSIONAL ENGINEER
No. 20214
4/3/2018
GEORGE TILLEY BULLOCK

PLOTTED: 3/20/2018 9:57:47 AM FILE NAME: \\CHS-FS1\Data\Jobs\Data\315191-05\Production\Transportation\XS\County Petigru\315191XS.dgn

STATE	COUNTY	D&F PROJECT NO.	ROAD NAME	SHEET NO.	TOTAL SHEETS
S.C.	GEORGETOWN	31519.11	PETIGRU DRIVE	X14	

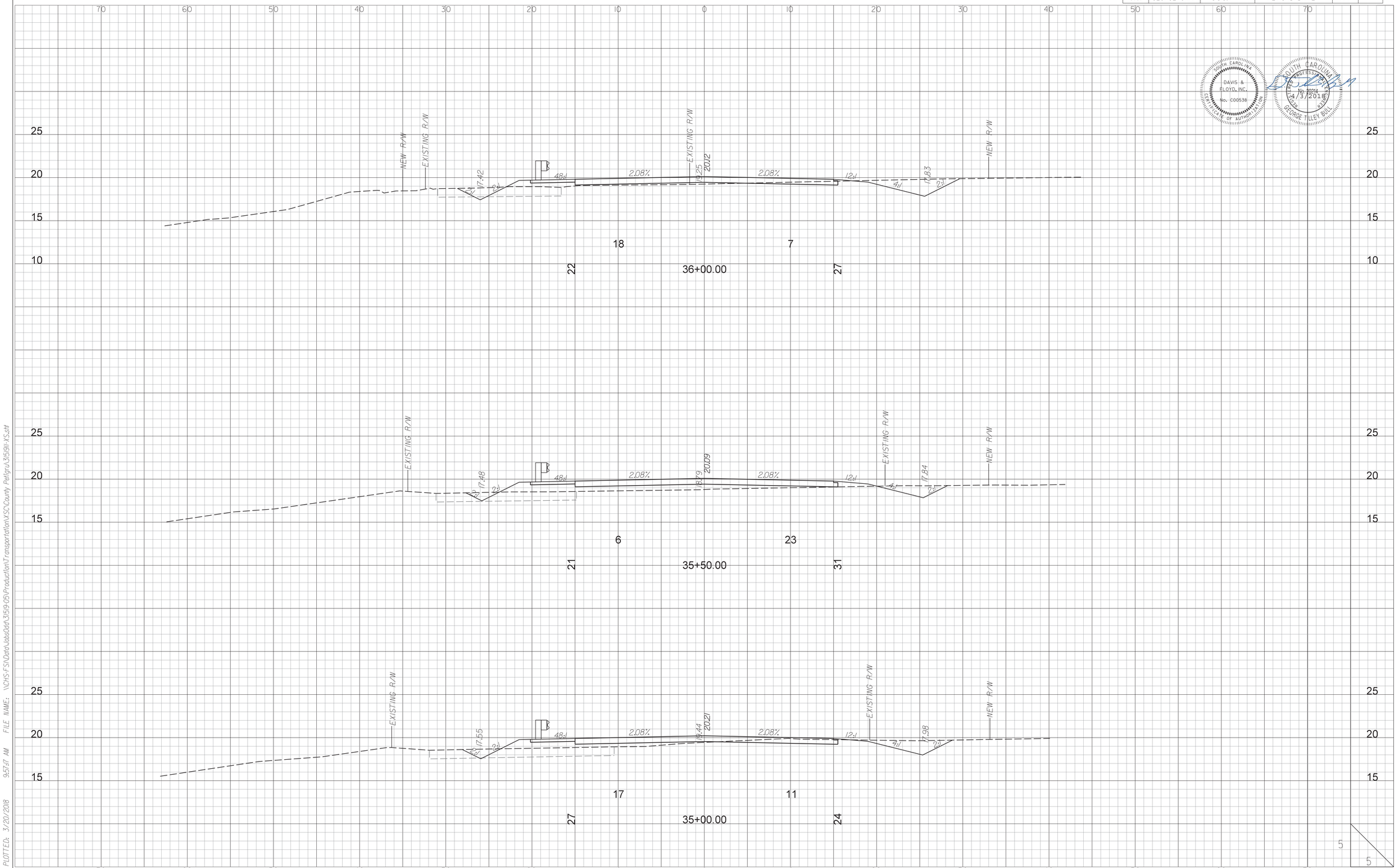

DAVIS & FLOYD, INC.
No. C00538
CERTIFICATE OF AUTHORIZATION

SOUTH CAROLINA
REGISTERED PROFESSIONAL ENGINEER
No. 20214
4/3/2018
GEORGE TILLEY BULLARD

PLOTTED: 3/20/2018 9:57:47 AM FILE NAME: \\CHS-FS1\Data\Jobs\Data\31519-05\Production\Transportation\XS\County Petigru\31519ILXS.dgn

STATE	COUNTY	D&F PROJECT NO.	ROAD NAME	SHEET NO.	TOTAL SHEETS
S.C.	GEORGETOWN	315191.11	PETIGRU DRIVE	X15	

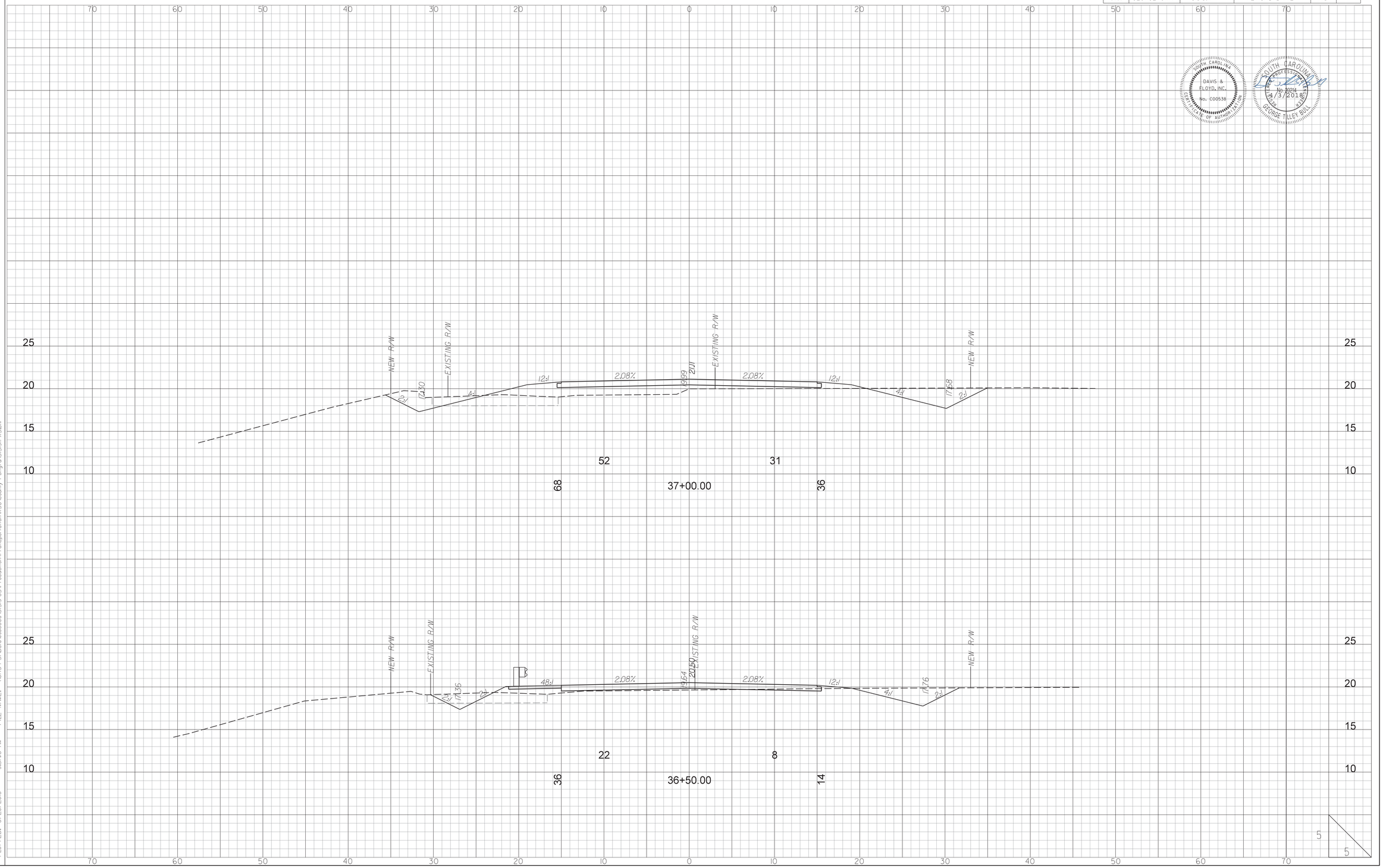

DAVIS & FLOYD, INC. No. C00538 CERTIFICATE OF AUTHORIZATION

SOUTH CAROLINA PROFESSIONAL ENGINEER No. 20214 4/3/2018 GEORGE TILLEY BULLOCK

PLOTTED: 3/20/2018 9:57:48 AM FILE NAME: \\CHS-FS1\Data\Jobs\Data\315191-05\Production\Transportation\SC\County Petigru\315191XS.dgn

STATE	COUNTY	D&F PROJECT NO.	ROAD NAME	SHEET NO.	TOTAL SHEETS
S.C.	GEORGETOWN	31519.11	PETIGRU DRIVE	X16	

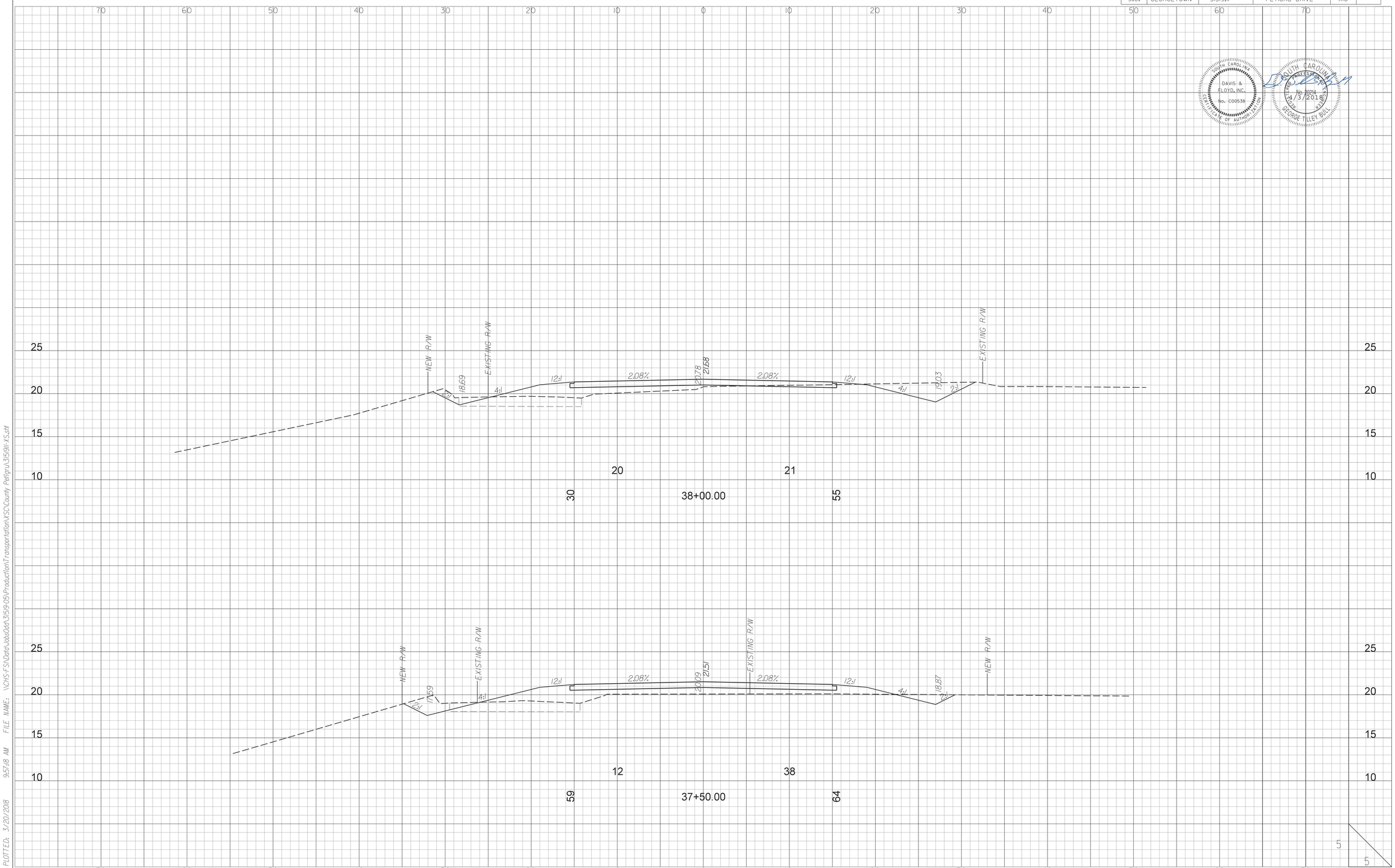

PLOTTED: 3/20/2018 9:57:18 AM FILE NAME: \\CHS-FS1\Data\JobsData\31519-05\Production\Transportation\SC\County Petigru\31519ii XS.dgn

STATE	COUNTY	D&F PROJECT NO.	ROAD NAME	SHEET NO.	TOTAL SHEETS
S.C.	GEORGETOWN	315191.11	PETIGRU DRIVE	X17	

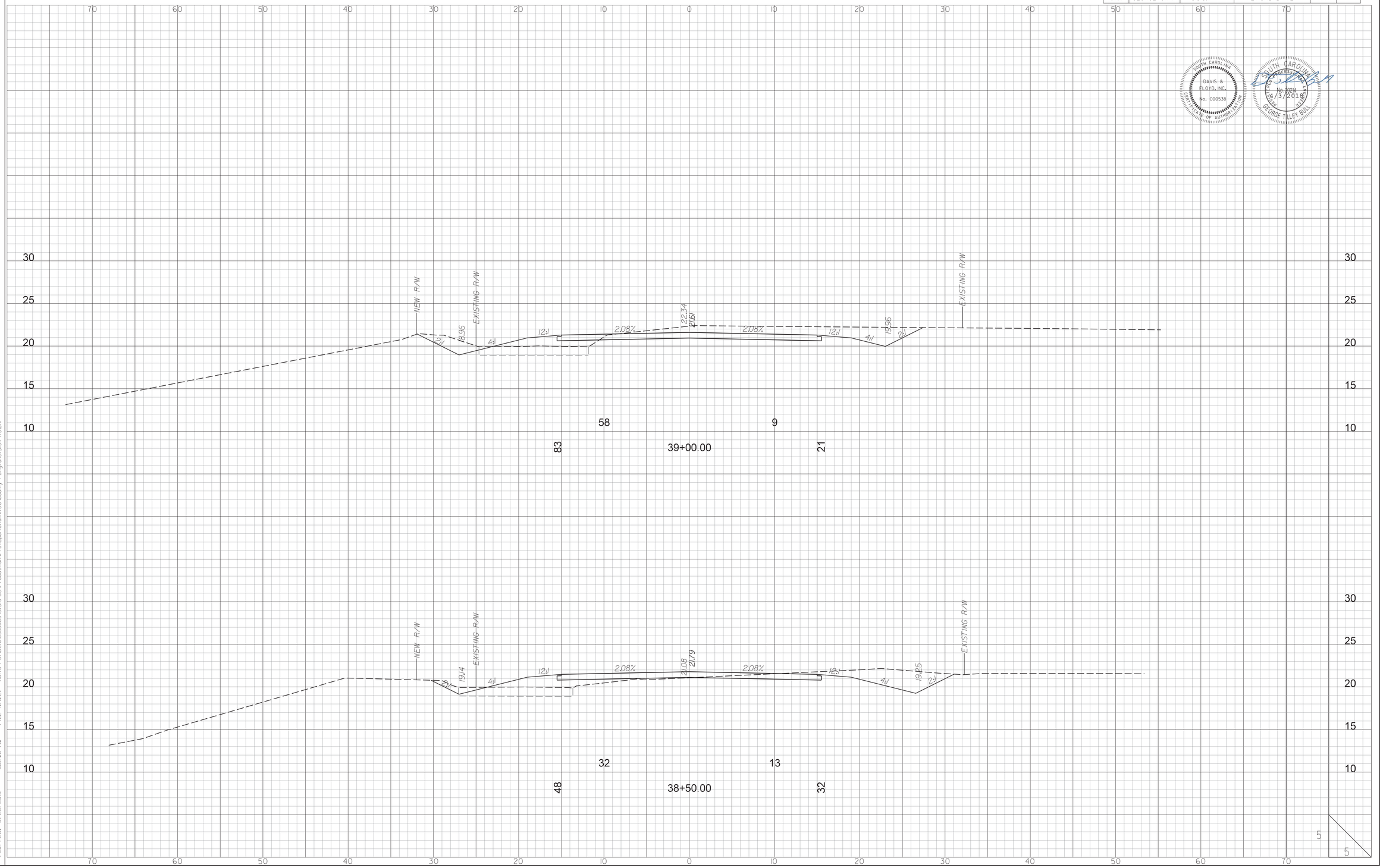

STATE	COUNTY	D&F PROJECT NO.	ROAD NAME	SHEET NO.	TOTAL SHEETS
S.C.	GEORGETOWN	31519.11	PETIGRU DRIVE	X18	

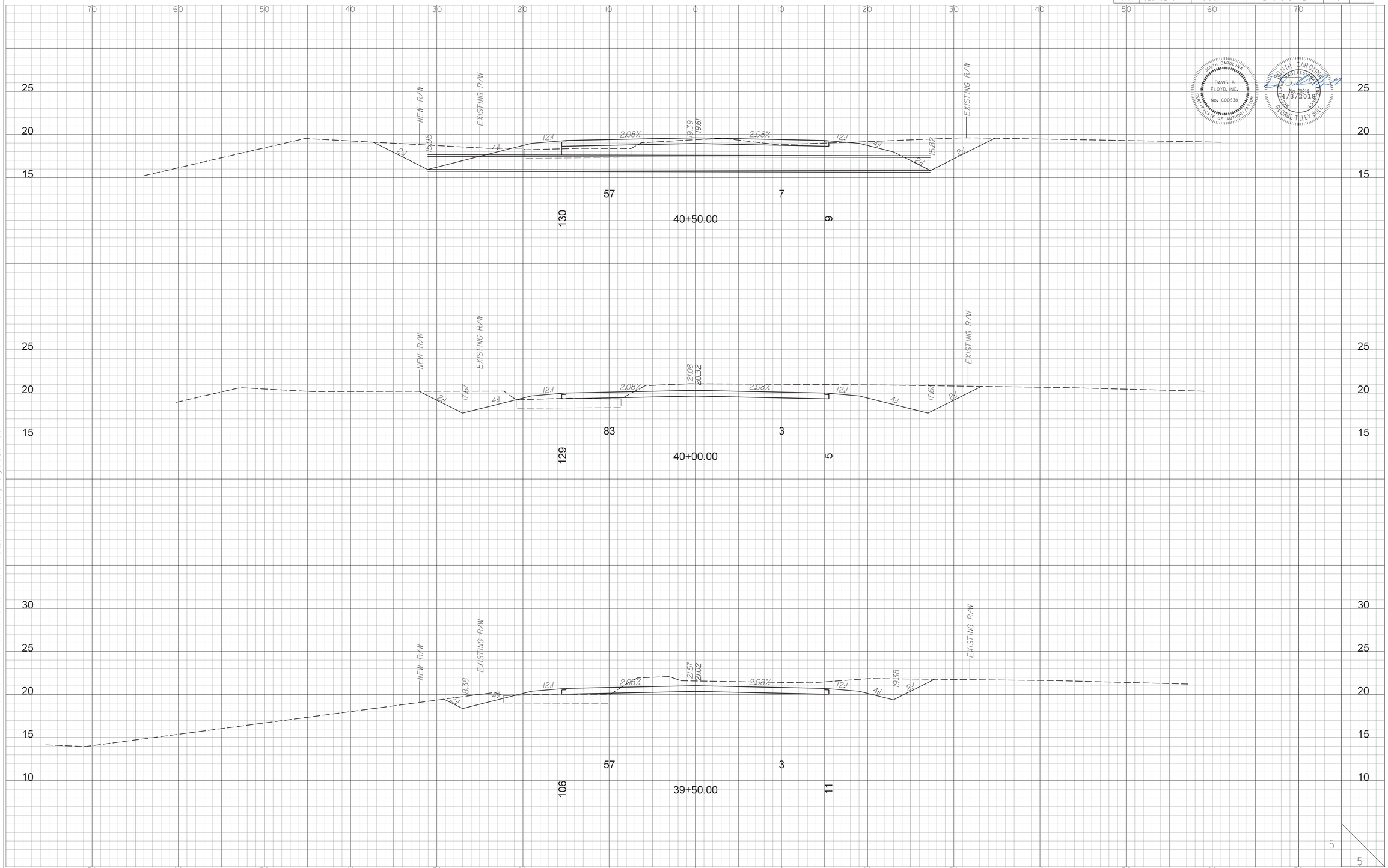

DAVIS & FLOYD, INC. No. C00538 CERTIFICATE OF AUTHORIZATION

SOUTH CAROLINA REGISTERED PROFESSIONAL ENGINEER No. 20214 4/3/2018 GEORGE TILLEY BULL

PLOTTED: 3/20/2018 9:57:48 AM FILE NAME: \\CHS-FS\Data\Jobs0da\31519-05\Production\Transportation\SC\County Petigru\31519ILXS.dgn

STATE	COUNTY	D&F PROJECT NO.	ROAD NAME	SHEET NO.	TOTAL SHEETS
S.C.	GEORGETOWN	31519.11	PETIGRU DRIVE	X19	

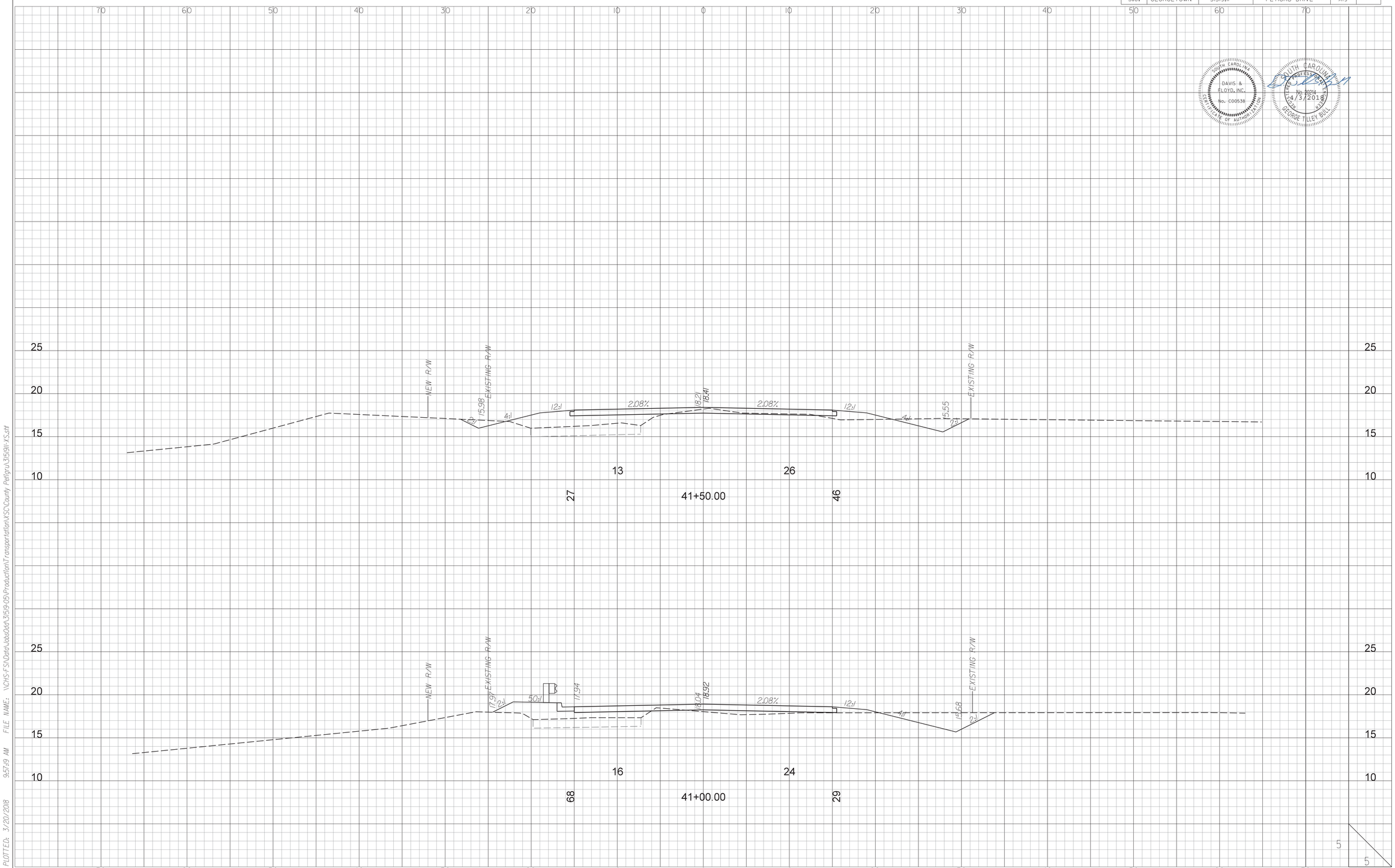

PLOTTED: 3/20/2018 9:57:19 AM FILE NAME: \\CHS-FS1\Data\JobsData\31519-05\Production\Transportation\SC\County Petigru\31519ii XS.dgn

STATE	COUNTY	D&F PROJECT NO.	ROAD NAME	SHEET NO.	TOTAL SHEETS
S.C.	GEORGETOWN	315191.11	PETIGRU DRIVE	X20	

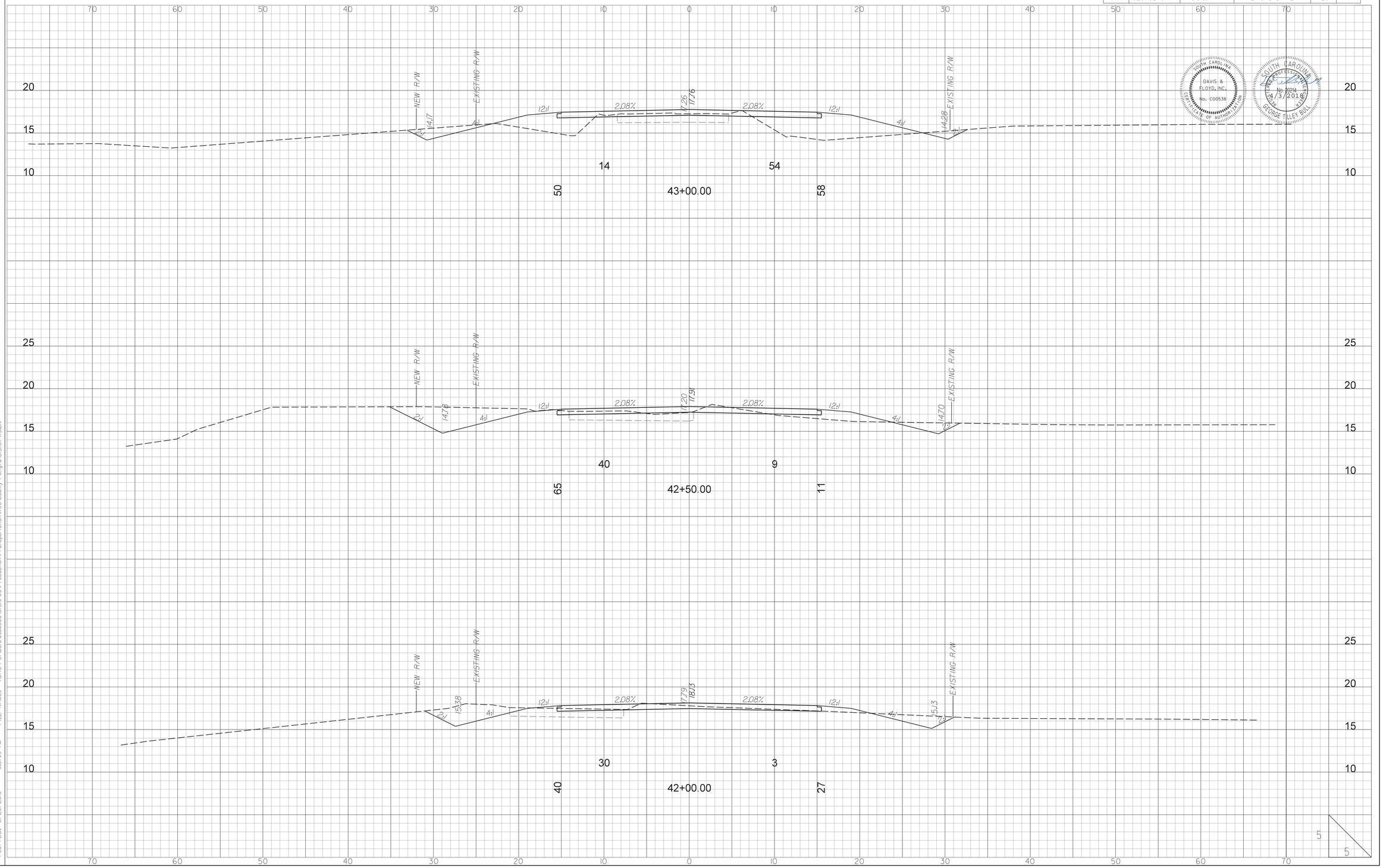

DAVIS & FLOYD, INC. No. C00538 CERTIFICATE OF AUTHORIZATION

SOUTH CAROLINA REGISTERED PROFESSIONAL ENGINEER No. 20214 4/3/2018 GEORGE TILLEY BULL

PLOTTED: 3/20/2018 9:57:19 AM FILE NAME: \\CHS-FS1\Data\Jobs\Data\315191-05\Production\Transportation\SC\County Petigru\315191XS.dgn

STATE	COUNTY	D&F PROJECT NO.	ROAD NAME	SHEET NO.	TOTAL SHEETS
S.C.	GEORGETOWN	3151911	PETIGRU DRIVE	X21	

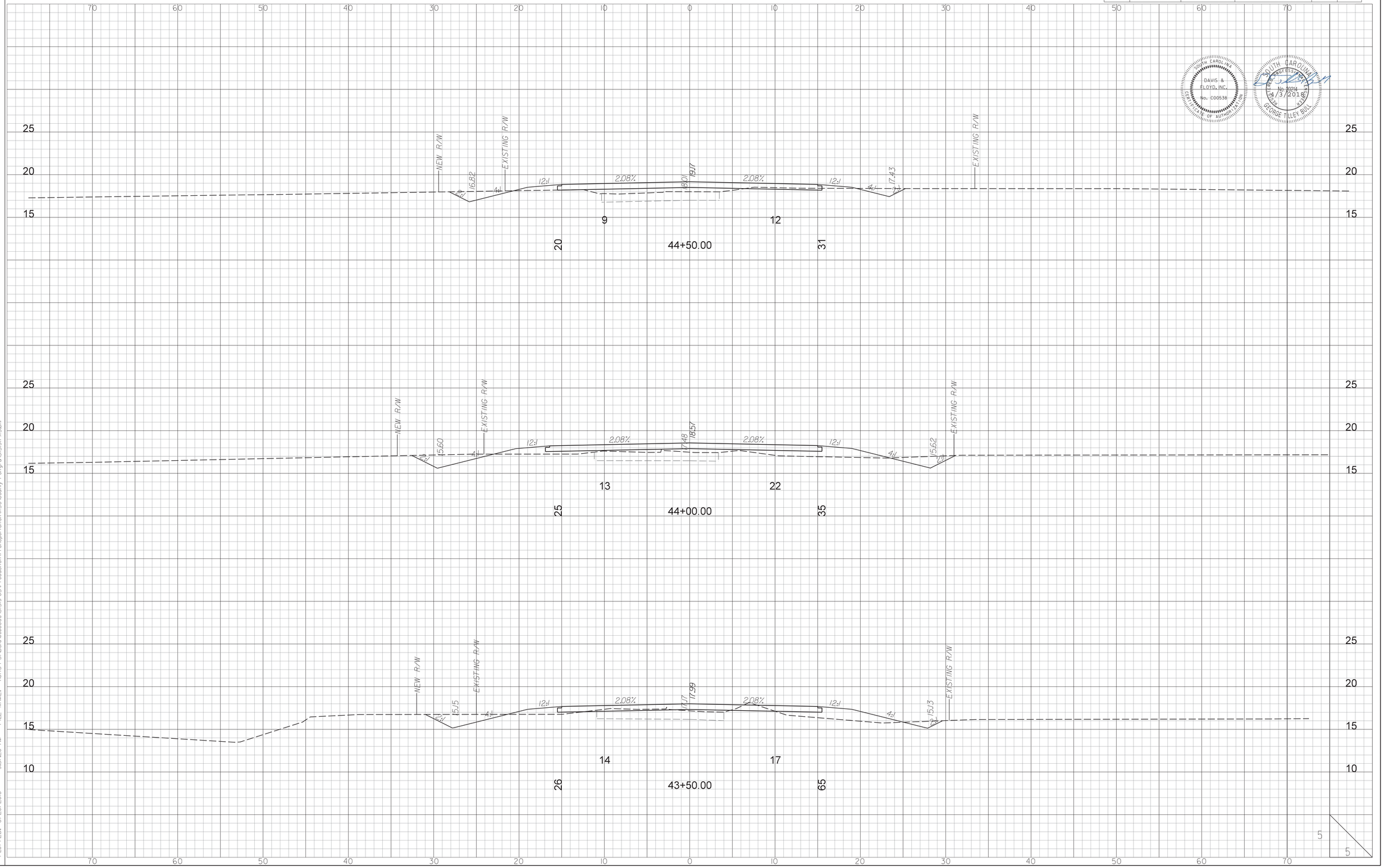

DAVIS & FLOYD, INC. No. C00538 CERTIFICATE OF AUTHORIZATION

SOUTH CAROLINA REGISTERED PROFESSIONAL ENGINEER No. 20214 4/3/2018 GEORGE TILLEY BULLARD

PLOTTED: 3/20/2018 9:57:20 AM FILE NAME: \\CHS-FS\Data\Jobs0dd\3159-05\Production\Transportation\SC\County Petigru\3159ll-XS.stl

STATE	COUNTY	D&F PROJECT NO.	ROAD NAME	SHEET NO.	TOTAL SHEETS
S.C.	GEORGETOWN	31519.11	PETIGRU DRIVE	X22	

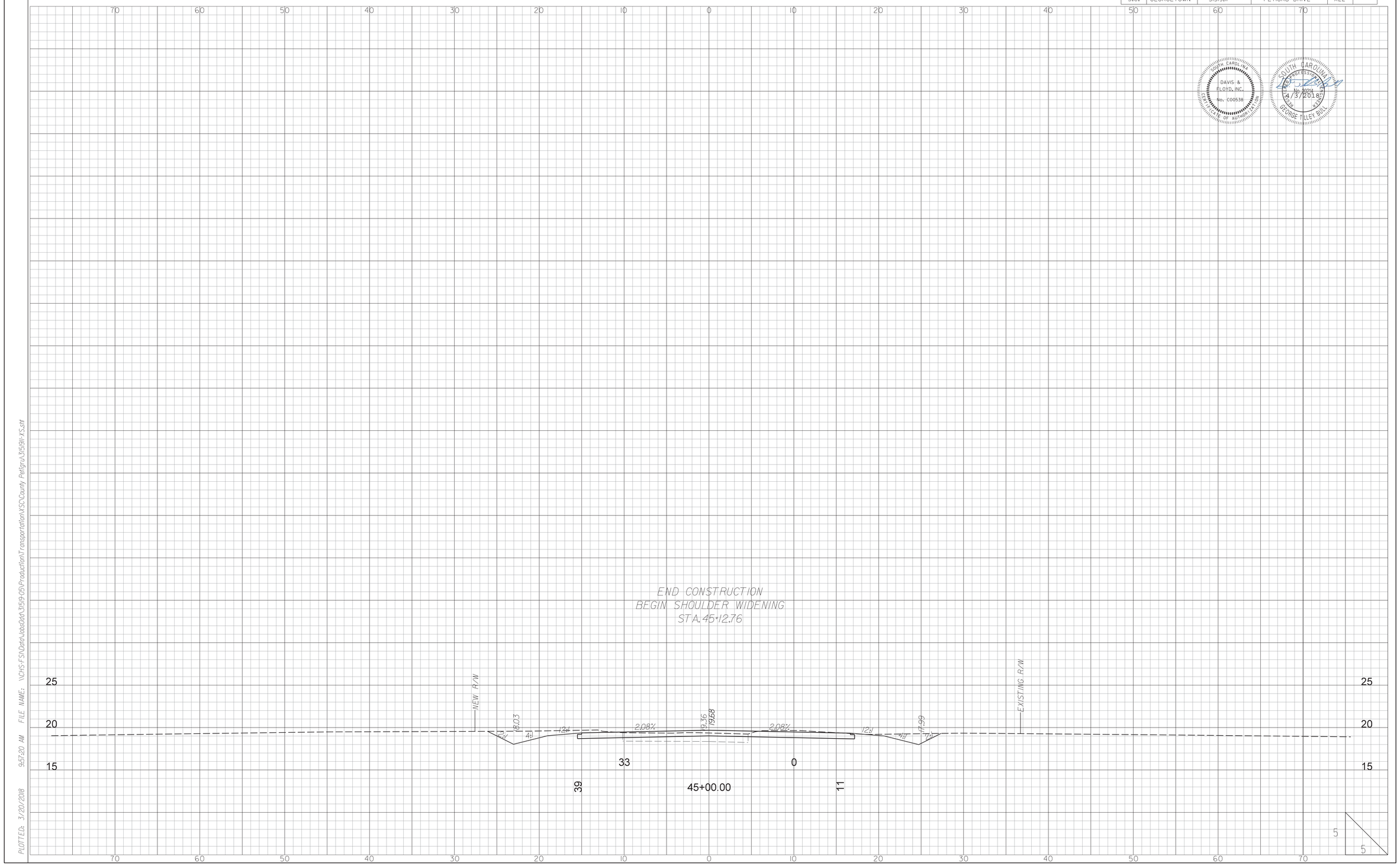

PLOTTED: 3/20/2018 9:57:20 AM FILE NAME: \\CHS-FS1\Data\Jobs\Data\31519-05\Production\Transportation\SC\County Petigru\31519ll.XSM

STATE	COUNTY	D&F PROJECT NO.	ROAD NAME	SHEET NO.	TOTAL SHEETS
S.C.	GEORGETOWN	31519.11	PETIGRU DRIVE	D01	

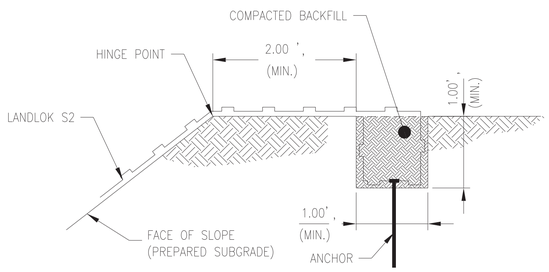

KEY TRENCH AT TOP OF SLOPE DETAIL

NTS

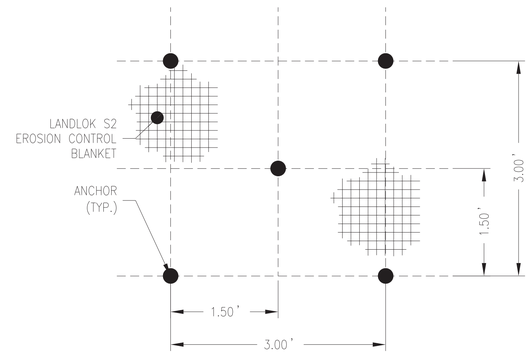

ANCHOR PATTERN

NTS

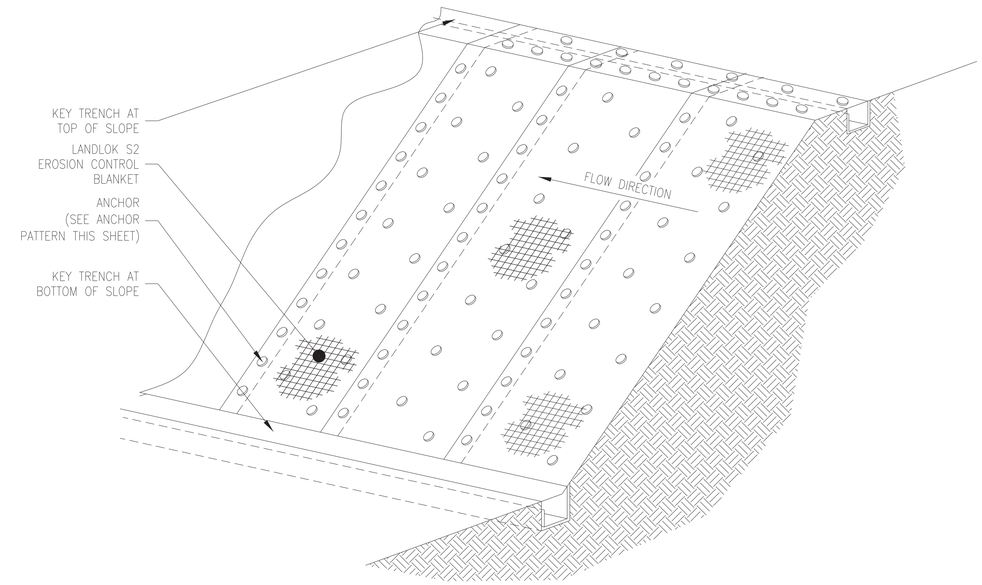

TURF REINFORCEMENT BLANKET ON SLOPE

NTS (ISOMETRIC)

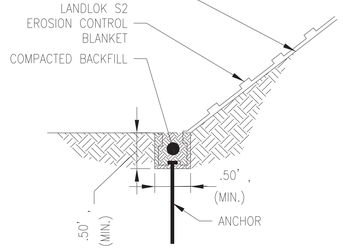

KEY TRENCH AT BOTTOM OF SLOPE DETAIL

NTS

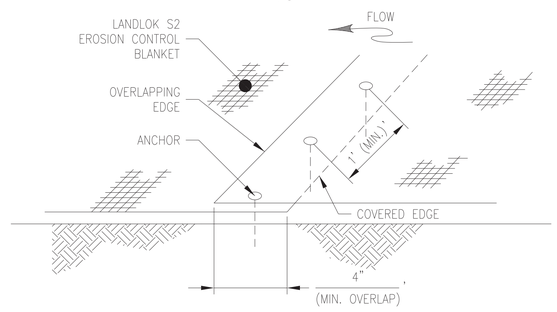

TURF REINFORCEMENT BLANKET OVERLAP JOINT

NTS

SOUTH CAROLINA DAVIS & FLOYD, INC. No. C00538 CERTIFICATE OF AUTHORIZATION

SOUTH CAROLINA PROFESSIONAL ENGINEER 2/15/18 No. 20214 GEORGE TILLEY BLEDSOE

DAVIS & FLOYD

SINCE 1954

WWW.DAVISFLOYD.COM

3229 W. MONTAGUE AVENUE
NORTH CHARLESTON, SC 29418
(843) 554-8062

REV. NO.	BY	DATE	DESCRIPTION OF REVISION
4			
3			
2			
1			

DGN. AMS DATE
R/W DATE
CHK. GTB DATE

GEORGETOWN COUNTY
ENGINEERED ROADS PROGRAM

PETIGRU DRIVE

TURF REINFORCEMENT BLANKET DETAIL

NTS

STATE	COUNTY	D&F PROJECT NO.	ROAD NAME	SHEET NO.	TOTAL SHEETS
S.C.	GEORGETOWN	31519.11	PETIGRU DRIVE	D02	

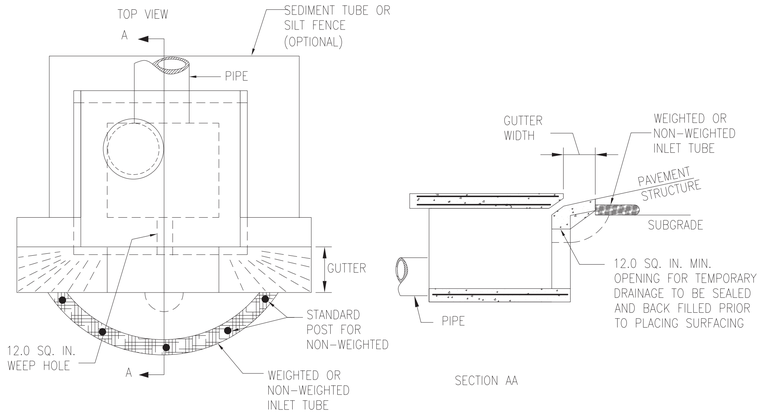

SC-11 TYPE F INLET TUBES

MATERIALS
USE INLET TUBES THAT EXHIBIT THE FOLLOWING PROPERTIES:
PRODUCED BY A MANUFACTURER EXPERIENCED IN SEDIMENT TUBE MANUFACTURING.
COMPOSED OF COMPACTED GEOTEXTILES, CURLED EXCELSIOR WOOD, NATURAL COCONUT FIBERS OR HARDWOOD MULCH OR A MIX OF THESE MATERIALS ENCLOSED BY A FLEXIBLE NETTING MATERIAL.
DO NOT USE STRAW, STRAW FIBER, STRAW BALES, PINE NEEDLES OR LEAF MULCH UNDER THIS SPECIFICATION.
UTILIZE AN OUTER NETTING THAT CONSISTS OF SEAMLESS, HIGH-DENSITY POLYETHYLENE PHOTODEGRADABLE MATERIALS TREATED WITH ULTRAVIOLET STABILIZERS OR A SEAMLESS, HIGH-DENSITY
POLYETHYLENE NON-DEGRADABLE MATERIALS.CURLED WOOD EXCELSIOR FIBER, OR NATURAL COCONUT FIBER ROLLED EROSION CONTROL PRODUCTS (RECP) ROLLED UP TO CREATE AN INLET TUBE
DEVICES ARE NOT ALLOWED UNDER THIS SPECIFICATION.

WEIGHTED INLET TUBES
WEIGHTED INLET TUBES ARE SEDIMENT TUBES CAPABLE OF STAYING IN PLACE WITHOUT EXTERNAL STABILIZATION MEASURES AND MAY HAVE A WEIGHTED INNER CORE OR OTHER WEIGHTED
MECHANISM TO KEEP THEM IN PLACE.

MATERIALS
APPLICABLE TYPE F WEIGHTED INLET TUBES MAY BE SELECTED FROM THE SCDOT APPROVED PRODUCTS LIST.

INSTALLATION:
INSTALL WEIGHTED INLET TUBES LYING FLAT ON THE GROUND, WITH NO GAPS BETWEEN THE UNDERLYING SURFACE AND THE INLET TUBE.
NEVER STACK WEIGHTED INLET TUBES ON TOP OF ONE ANOTHER.

DO NOT COMPLETELY BLOCK INLETS WITH WEIGHTED INLET TUBES.

INSTALL WEIGHTED INLET TUBES IN SUCH A MANNER THAT ALL OVERFLOW OR OVERTOPPING WATER HAS THE ABILITY TO ENTER THE INLET UNOBSTRUCTED.

TO AVOID POSSIBLE FLOODING, TWO OR THREE CONCRETE CINDER BLOCKS MAY BE PLACED BETWEEN THE WEIGHTED INLET TUBES AND THE INLET.

NON-WEIGHTED INLET TUBES
NON-WEIGHTED INLET TUBES ARE DEFINED AS SEDIMENT TUBES THAT REQUIRE STAKING OR OTHER STABILIZATION METHODS TO KEEP THEM SAFELY IN PLACE.

MATERIALS
APPLICABLE TYPE F NON-WEIGHTED INLET TUBES MAY BE SELECTED FROM THE SCDOT APPROVED PRODUCTS LIST.

INSPECTION AND MAINTENANCE:
INLET TUBES MAY BE TEMPORARILY MOVED DURING CONSTRUCTION AS NEEDED.
REPLACE INLET TUBES DAMAGED DURING INSTALLATION AS DIRECTED BY THE INSPECTOR OR MANUFACTURER'S REPRESENTATIVE AT THE CONTRACTOR'S EXPENSE.

SC-07: TYPE A FILTER FABRIC INLET PROTECTION

MATERIALS:
USE FILTER FABRIC THAT CONFORMS TO SCDOT STANDARD SPECIFICATIONS FOR HIGHWAY CONSTRUCTION (LATEST EDITION). REFER TO THE SILT FENCE GEOTEXTILE FABRICS APPROVAL SHEET #34.

USE STEEL POSTS THAT MEET THE FOLLOWING MINIMUM PHYSICAL REQUIREMENTS:
BE COMPOSED OF HIGH STRENGTH STEEL WITH MINIMUM YIELD STRENGTH OF 50,000 PSI.
HAVE A STANDARD "T" SECTION WITH A NOMINAL FACE WIDTH OF 1.38-INCHES AND NOMINAL "T" LENGTH OF 1.48-INCHES.
WEIGH 1.25 POUNDS PER FOOT (±8%).
BE PAINTED WITH A WATER BASED BAKED ENAMEL PAINT.
ATTACH FABRIC TO METAL POSTS WITH HEAVY-DUTY PLASTIC TIES.

INSTALLATION:
EXCAVATE A TRENCH 6-INCHES WIDE AND 6-INCHES DEEP AROUND THE OUTSIDE PERIMETER OF THE INLET UNLESS THE FABRIC IS PNEUMATICALLY INSTALLED. EXTEND THE FILTER FABRIC A MINIMUM OF 12-INCHES INTO THE TRENCH. BACKFILL THE TRENCH WITH SOIL OR CRUSHED STONE AND COMPACT OVER THE FILTER FABRIC UNLESS THE FABRIC IS PNEUMATICALLY INSTALLED.

USE STEEL POSTS WITH A MINIMUM POST LENGTH OF 60-INCHES CONSISTING OF STANDARD "T" SECTIONS WITH A WEIGHT OF 1.25 POUNDS PER FOOT (±8%). INSTALL THE FILTER FABRIC TO A MINIMUM HEIGHT OF 24-INCHES ABOVE GRADE. SPACE THE STEEL POSTS AROUND THE PERIMETER OF THE INLET A MAXIMUM OF 3-FEET APART AND DRIVE THEM INTO THE GROUND A MINIMUM OF 24-INCHES. CUT THE FILTER FABRIC FROM A CONTINUOUS ROLL TO THE LENGTH OF THE PROTECTED AREA TO AVOID THE USE OF JOINTS. WHEN JOINTS ARE NECESSARY, WRAP FILTER FABRIC TOGETHER ONLY AT A SUPPORT POST WITH BOTH ENDS FASTENED TO THE POST, WITH A MINIMUM 6-INCH OVERLAP. ATTACH FABRIC TO STEEL POSTS WITH HEAVY-DUTY PLASTIC TIES. ATTACH AT LEAST FOUR (4) EVENLY SPACED TIES IN A MANNER TO PREVENT SAGGING OR TEARING OF THE FABRIC. IN ALL CASES, AFFIX TIES IN NO LESS THAN FOUR (4) PLACES.

INSPECTION AND MAINTENANCE:
INSPECTIONS SHOULD BE MADE EVERY 7 CALENDAR DAYS AND WITHIN 24-HOURS AFTER EACH STORM THAT PRODUCES 1/2-INCHES OR MORE OF RAIN. IF THE FABRIC BECOMES CLOGGED, IT SHOULD BE REPLACED. SEDIMENT SHOULD BE REMOVED WHEN IT REACHES APPROXIMATELY 1/3 THE HEIGHT OF THE FENCE. TAKE CARE NOT TO DAMAGE OR UNDERCUT FABRIC WHEN REMOVING SEDIMENT. IF A SUMP IS USED, SEDIMENT SHOULD BE REMOVED WHEN IT FILLS APPROXIMATELY 1/3 THE DEPTH OF THE HOLE. MAINTAIN THE POOL AREA, ALWAYS PROVIDING ADEQUATE SEDIMENT STORAGE VOLUME FOR THE NEXT STORM.

STORM DRAIN INLET PROTECTION STRUCTURES SHOULD BE REMOVED ONLY AFTER THE DISTURBED AREAS ARE PERMANENTLY STABILIZED. REMOVE ALL CONSTRUCTION MATERIAL AND SEDIMENT, AND DISPOSE OF THEM PROPERLY. GRADE THE DISTURBED AREA TO THE ELEVATION OF THE DROP INLET STRUCTURE CREST. USE APPROPRIATE PERMANENT STABILIZATION METHODS TO STABILIZE BARE AREAS AROUND THE INLET.

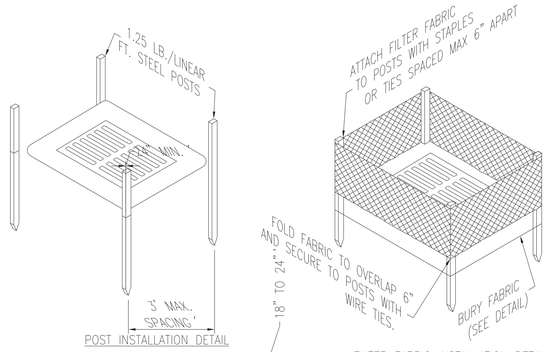

SOUTH CAROLINA
DAVIS & FLOYD, INC.
No. C00538
CERTIFICATE OF AUTHORIZATION

SOUTH CAROLINA
REGISTERED PROFESSIONAL ENGINEER
2/15/18
No. 20214
GEORGE TILLEY BOLTON III

DAVIS & FLOYD
SINCE 1954
WWW.DAVISFLOYD.COM

3229 W. MONTAGUE AVENUE
NORTH CHARLESTON, SC 29418
(843) 554-8802

REV. NO.	BY	DATE	DESCRIPTION OF REVISION
4			
3			
2			
1			

DGN. AMS DATE
R/W DATE
CHK. GTB DATE

GEORGETOWN COUNTY
ENGINEERED ROADS PROGRAM

PETIGRU DRIVE
INLET FILTER DETAIL

NTS

STATE	COUNTY	D&F PROJECT NO.	ROAD NAME	SHEET NO.	TOTAL SHEETS
S.C.	GEORGETOWN	31519.11	PETIGRU DRIVE	D03	

OUTLET PROTECTION WITH DEFINED CHANNEL

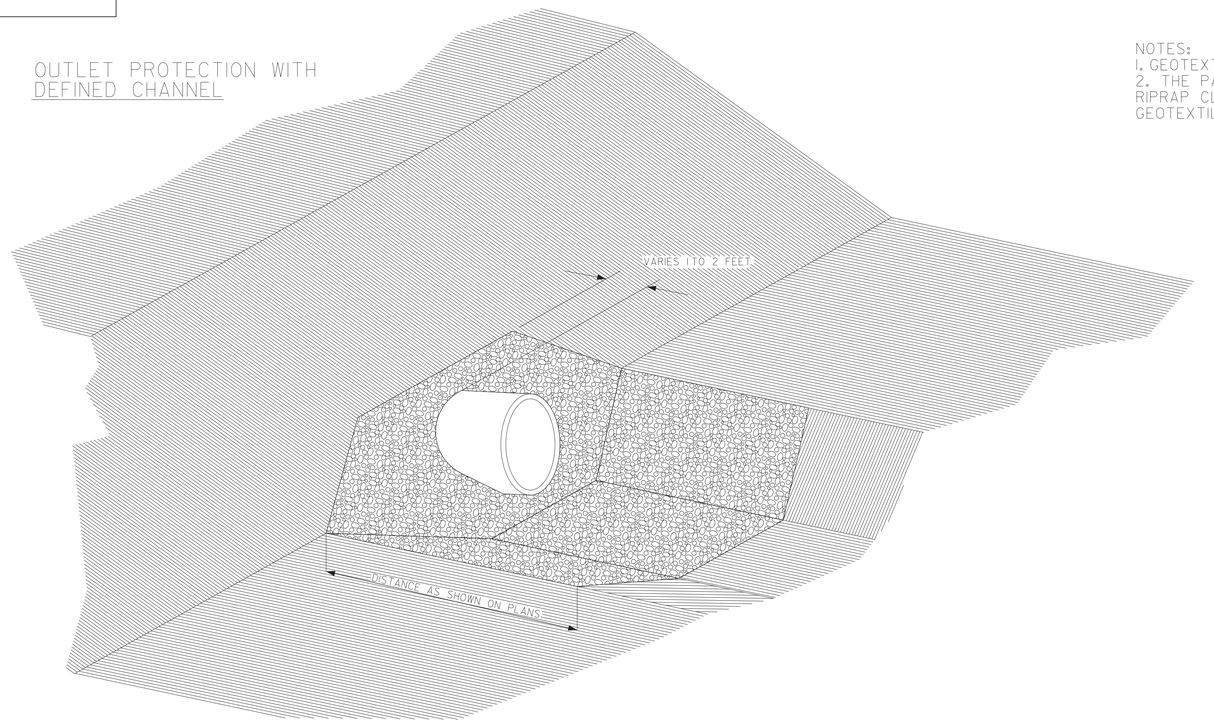

NOTES:
1. GEOTEXTILE FABRIC TO BE USED UNDER RIPRAP
2. THE PAY ITEMS SHALL BE:
RIPRAP CLASS __-__ TON
GEOTEXTILE FOR EROSION CONTROL UNDER RIPRAP CLASS 2 TYPE C S.Y.

RIPRAP PLACEMENT WITH MINIMUM TAILWATER			
MINIMUM CLASS	D_{50} (FT)	MINIMUM THICKNESS (FT)	PIPE DIAMETER
A	0.50	1.00	UP TO 24"
B	0.75	1.50	UP TO 84"
C	1.30	2.60	LARGER THAN 84"

NOTES:
1) FIELD ADJUSTMENTS TO IMPLEMENT DETAILS MAY BE REQUIRED AND CAN BE APPROVED BY THE COUNTY RESIDENT CONSTRUCTION MANAGER OR THE PROJECT ENGINEER.

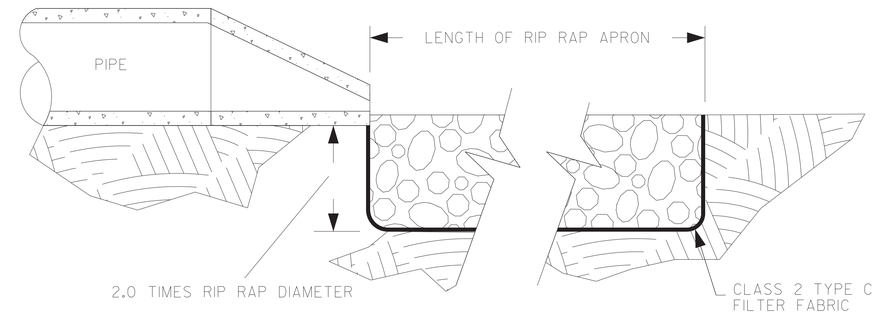

OUTLET PROTECTION WITH NO DEFINED CHANNEL

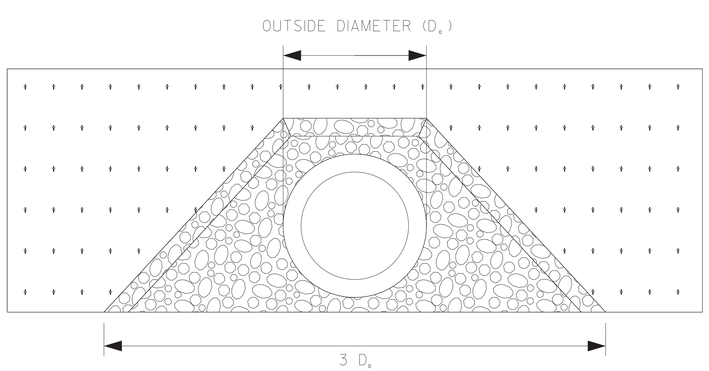

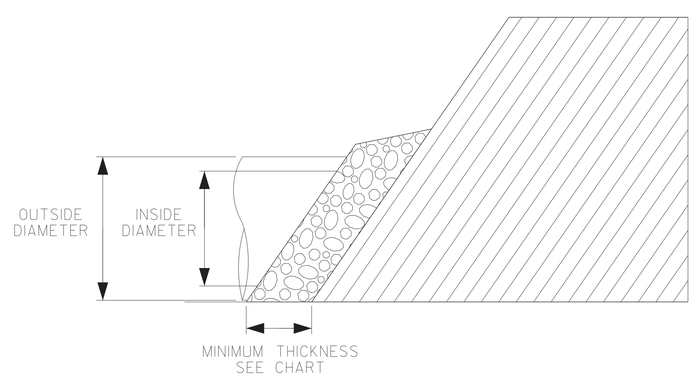

NOTES:
1. OUTLET PROTECTION WILL HAVE A WIDTH THREE TIMES THE OUTSIDE DIAMETER OF THE OUTLET PIPE AT TOE OF SLOPE

2. ADVANCE OUTLET PROTECTION UP THE SLOPE A MINIMUM OF 1 FOOT ABOVE THE PIPE INVERS

3. THE PAYMENT ITEMS MAY INCLUDE:

UNCLASSIFIED EXCAVATION	CY
TRM TYPE 1	MSY
TRM TYPE 2	MSY
TRM TYPE 3	MSY
TRM TYPE 4	MSY
RIPRAP CLASS A	CY
RIPRAP CLASS B	CY
RIPRAP CLASS C	CY
CLASS 2 GEOTEXTILE	SY

RIPRAP PLACEMENT WITH MINIMUM TAILWATER			
MINIMUM CLASS	D_{50} (FT)	MINIMUM THICKNESS (FT)	PIPE DIAMETER
A	0.50	1.00	UP TO 24"
B	0.75	1.50	UP TO 84"
C	1.30	2.60	LARGER THAN 84"

SOUTH CAROLINA DAVIS & FLOYD, INC. No. C00538 CERTIFICATE OF AUTHORIZATION

SOUTH CAROLINA REGISTERED PROFESSIONAL ENGINEER 2/15/18 No. 20214 GEORGE TILLEY BULL

DAVIS & FLOYD
SINCE 1954
WWW.DAVISFLOYD.COM

3229 W. MONTAGUE AVENUE
NORTH CHARLESTON, SC 29418
(843) 554-8602

REV. NO.	BY	DATE	DESCRIPTION OF REVISION
4			
3			
2			
1			

DGN. AMS DATE
R/W DATE
CHK. GTB DATE

GEORGETOWN COUNTY
ENGINEERED ROADS PROGRAM

PETIGRU DRIVE

RIPRAP & GEOTEXTILE FABRIC
DETAIL SHEET

NTS

STATE	COUNTY	D&F PROJECT NO.	ROAD NAME	SHEET NO.	TOTAL SHEETS
S.C.	GEORGETOWN	31519.11	PETIGRU DRIVE	D04	

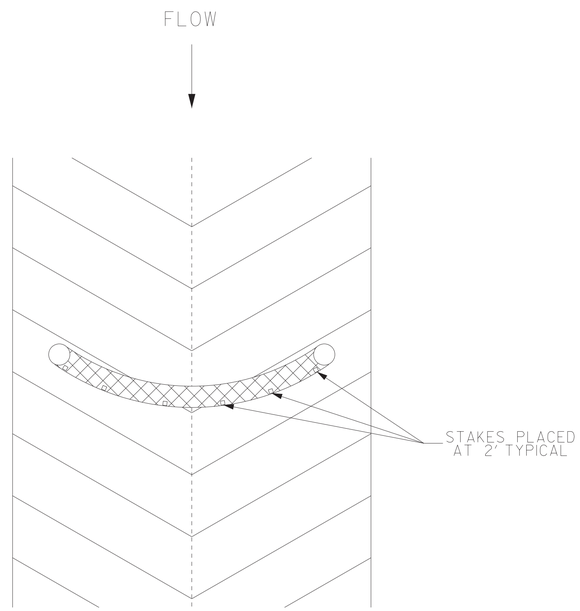

TOP VIEW OF DITCH

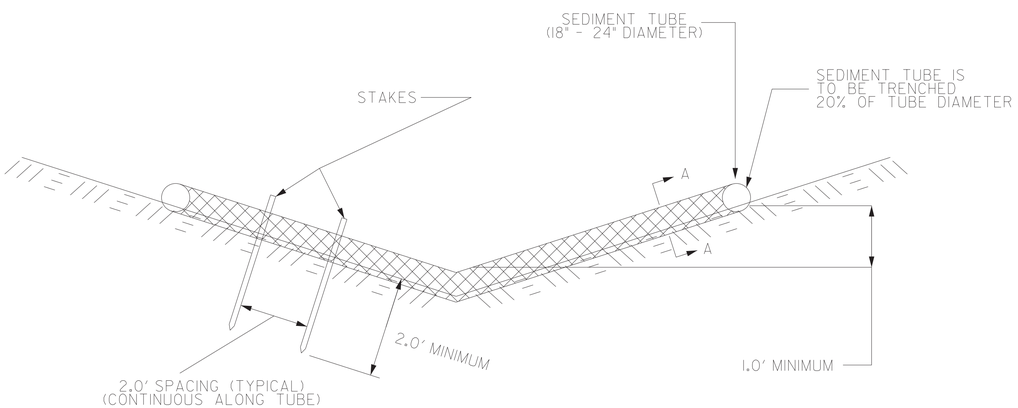

END VIEW OF DITCH

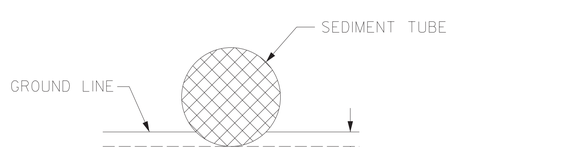

SECTION A-A

NOTES:

1.) PROPER SITE PREPARATION IS ESSENTIAL TO ENSURE SEDIMENT TUBES ARE IN COMPLETE CONTACT WITH UNDERLYING SOIL. SEDIMENT TUBES ARE TO BE 18-24 INCHES IN DIAMETER AND ARE TO BE TRENCHED TO A DEPTH OF 20% OF TUBE DIAMETER. LAY THE SEDIMENT TUBE FLAT IN THE U-SHAPED TRENCH AND COMPACT THE UPSTREAM SEDIMENT TUBER SOIL INTERFACE. PLACE AND ANCHOR THE SEDIMENT TUBE ENDS SO THEY ARE POSITIONED UPSTREAM OF THE SEDIMENT TUBE CENTER POINT. SEDIMENT TUBES FOR DITCH CHECKS WEIGHING MORE THAN 18 POUNDS PER FOOT DO NOT REQUIRE TRENCHING.

2.) SEDIMENT TUBE SHALL BE INSTALLED IMMEDIATELY AFTER GRADING AND CONSTRUCTION. SEDIMENT TUBE SHALL BE MAINTAINED DURING SUBGRADE AND BASE PREPARATION UNTIL BASE COURSE IS COMPLETE. SEDIMENT TUBES MAY BE TEMPORARILY MOVED DURING CONSTRUCTION.

3.) SEDIMENT TUBES ARE TO BE INSTALLED PERPENDICULAR TO WATER FLOW AND EXTEND UP SIDE SLOPES A MINIMUM OF 1FOOT ABOVE DESIGN FLOW DEPTH. SPACE TUBES ACCORDING TO THE FOLLOWING TABLE:

SLOPE	MAXIMUM SEDIMENT TUBE SPACING
LESS THAN 2%	150 FEET
2%	100 FEET
3%	75 FEET
4%	50 FEET
5%	40 FEET
6%	30 FEET
GREATER THAN 6%	25 FEET

4.) STAKE SEDIMENT TUBES FOR DITCH CHECKS USING STAKES WITH A MINIMUM MEASURED DIMENSION OF 3/4" X 3/4" AND A MAXIMUM MEASURED DIMENSION OF 2'X 2'. OR USING STEEL POSTS (1.25 lbs/linear foot) A MINIMUM OF 4' IN LENGTH. USE STEEL POSTS WITHOUT A KICK PLATE AND PAINTING IS NOT REQUIRED. SPACE POSTS OR STAKES ON 2' CENTERS AND DRIVE THEM INTO THE GROUND TO A DEPTH OF 2' OR TO THE MAXIMUM EXTENT PRACTIBLE. INSTALL THE STAKES ON THE DOWNSTREAM THIRD OF THE SEDIMENT TUBE. SEDIMENT TUBES FOR DITCH CHECKS WEIGHING MORE THAN 18 POUNDS PER FOOT DO NOT REQUIRE STAKING.

5.) SELECT PROPER LENGTH OF TUBE TO MINIMIZE THE NUMBER NEEDED TO SPAN THE WIDTH OF THE DRAINAGE AREA. ON CONTINUOUS LENGTH IS PREFERRED COMPARED TO TWO OVERLAPPING TUBES. IF NECESSARY, SEDIMENT TUBES CAN BE LAPPED A MINIMUM OF 6 INCHES TO PREVENT PASSAGE OF FLOW AND SEDIMENT THROUGH FIELD JOINT.

6.) INSTALL SEDIMENT TUBES FOR DITCH CHECKS OVER BARE SOIL, MULCHED AREAS, OR EROSION CONTROL BLANKETS. KEEP SEDIMENT TUBES FOR DITCH CHECKS IN PLACE UNTIL FULLY ESTABLISHED VEGETATION AND ROOTS SYSTEMS HAVE COMPLETELY DEVELOPED AND CAN SURVIVE ON THEIR OWN.

7.) INSPECT SEDIMENT TUBES AFTER INSTALLATION FOR GAPS UNDER THE SEDIMENT TUBES AND FOR GAPS BETWEEN THE JOINTS OF ADJACENT ENDS OF SEDIMENT TUBES. INSPECT SEDIMENT TUBES EVERY 7 DAYS. REPAIR ALL RILLS, GULLIES, AND UNDERCUTTING NEAR SEDIMENT TUBES. REMOVE ALL SEDIMENT DEPOSITS THAT IMPAIR THE FILTRATION CAPABILITY OF SEDIMENT TUBES WHEN THE SEDIMENT REACHES 1/3 THE HEIGHT OF THE EXPOSED SEDIMENT TUBE.

8.) REMOVE AND/OR REPLACE INSTALLED SEDIMENT TUBES AS REQUIRED TO ADAPT TO CHNAGING CONSTRUCTION SITE CONDITIONS. REMOVE SEDIMENT TUBES WHEN THE FUNCTIONAL LONGEVITY IS EXCEEDED AS DETERMINED BY THE ENGINEER, INSPECTOR, OR MANUFACTURER'S REPRESENTATIVE. GATHER SEDIMENT TUBES AND DISPOSE OF THEM IN REGULAR MEANS AS NON-HAZARDOUS, INERT MATERIAL.

8.)REMOVE AND/OR REPLACE INSTALLED SEDIMENT TUBES AS REQUIRED TO ADAPT TO CHNAGING CONSTRUCTION SITE CONDITIONS. REMOVE SEDIMENT TUBES WHEN THE FUNCTIONAL LONGEVITY IS EXCEEDED AS DETERMINED BY THE ENGINEER, INSPECTOR, OR MANUFACTURER'S REPRESENTATIVE. GATHER SEDIMENT TUBES AND DISPOSE OF THEM IN REGULAR MEANS AS NON-HAZARDOUS, INERT MATERIAL.

9.)PRIOR TO FINAL STABILIZATION, BACKFILL ALL TRENCHES, DEPRESSIONS, AND OTHER GROUND DISTURBANCES CAUSED BY THE REMOVAL OF SEDIMENT TUBES.

10.) CLEAN OUT OF TUBES WILL BE PAID FOR AS SILT BASIN IN C.Y.

11.) PAYNEBT SHALL INCLUDE ALL MATERIALS, LABOR, TOOLS, EQUIPMENT, MAINTENANCE, AND INCEDENTALS NECESSARY TO COMPLETE WORK.

12.) PAY ITEM SHALL BE:
SEDIMENT TUBE.....LF

NOTES:
1) FIELD ADJUSTMENTS TO IMPLEMENT DETAILS MAY BE REQUIRED AND CAN BE APPROVED BY THE COUNTY RESIDENT CONSTRUCTION MANAGER OR THE PROJECT ENGINEER.

SOUTH CAROLINA DAVIS & FLOYD, INC. No. C00538 CERTIFICATE OF AUTHORIZATION

SOUTH CAROLINA PROFESSIONAL ENGINEER 2/15/18 No. 20214 GEORGE TILLEY BULLOCK III

DAVIS & FLOYD
SINCE 1954
WWW.DAVISFLOYD.COM

3229 W. MONTAGUE AVENUE NORTH CHARLESTON, SC (843) 554-8602

REV. NO.	BY	DATE	DESCRIPTION OF REVISION
4			
3			
2			
1			

DGN. AMS DATE
R/W DATE
CHK. GTB DATE

GEORGETOWN COUNTY
ENGINEERED ROADS PROGRAM

PETIGRU DRIVE
SEDIMENT TUBE
DETAIL SHEET

NTS

STATE	COUNTY	D&F PROJECT NO.	ROAD NAME	SHEET NO.	TOTAL SHEETS
S.C.	GEORGETOWN	31519.11	PETIGRU DRIVE	D05	

PERMANENT SEEDING - COASTAL

SPECIES	LBS/Ac	JAN	FEB	MAR	APR	MAY	JUN	JUL	AUG	SEP	OCT	NOV	DEC
SANDY, DROUGHTY SITES													
BROWNTOP MILLET BAHIAGRASS	10 LBS/Ac 40 LBS/Ac												
BROWNTOP MILLET BAHIAGRASS SERICEA LESPEDEZA	10 LBS/Ac 30 LBS/Ac 40 LBS/Ac												
BROWNTOP MILLET ATLANTIC COASTAL PANICGRASS	10 LBS/Ac 15 LBS/Ac PLS												
BROWNTOP MILLET SWITCHGRASS (ALAMO) LITTLE BLUESTEM SERICEA LESPEDEZA	10 LBS/Ac 8 LBS/Ac PLS 4 LBS/Ac 20 LBS/Ac												
BROWTOP MILLET WEEPING LOVEGRASS	10 LBS/Ac 8 LBS/Ac												
WELL DRAINED, CLAYEY/LOAMEY SITES													
BROWNTOP MILLET BAHIAGRASS	10 LBS/Ac 40 LBS/Ac												
RYE, GRAIN BAHIAGRASS CLOVER, CRIMSON (ANNUAL)	10 LBS/Ac 40 LBS/Ac 5 LBS/Ac												
BROWTOP MILLET BAHIAGRASS SERICEA LESPEDEZA	10 LBS/Ac 30 LBS/Ac 40 LBS/Ac												
BROWTOP MILLET BERMUDA, COMMON SERICEA LESPEDEZA	10 LBS/Ac 10 LBS/Ac 40 LBS/Ac												
BROWNTOP MILLET BERMUDA, COMMON KOBE LESPEDEZA (ANNUAL)	10 LBS/Ac 12 LBS/Ac 10 LBS/Ac												
BROWNTOP MILLET BAHIAGRASS BERMUDA, COMMON SERICEA LESPEDEZA	10 LBS/Ac 20 LBS/Ac 6 LBS/Ac 40 LBS/Ac												
BROWNTOP MILLET SWITCHGRASS LITTLE BLUESTEM INDIANGRASS	10 LBS/Ac 8 LBS/Ac PLS 3 LBS/Ac PLS 3 LBS/Ac PLS												

TEMPORARY SEEDING - COASTAL

SPECIES	LBS/Ac	JAN	FEB	MAR	APR	MAY	JUN	JUL	AUG	SEP	OCT	NOV	DEC
SANDY, DROUGHTY SITES													
BROWNTOP MILLET RYE, GRAIN RYEGRASS	40 LBS/Ac 56 LBS/Ac 50 LBS/Ac												
WELL DRAINED, CLAYEY/LOAMEY SITES													
BROWNTOP MILLET OR JAPANESE MILLET	40 LBS/Ac												
RYE, GRAIN OR OATS	56 LBS/Ac 75												
RYEGRASS	50 LBS/Ac												

SOUTH CAROLINA
DAVIS & FLOYD, INC.
No. C00538
CERTIFICATE OF AUTHORIZATION

SOUTH CAROLINA
REGISTERED PROFESSIONAL ENGINEER
2/15/18
No. 20241
GEORGE TILLEY BULL

DAVIS & FLOYD
SINCE 1954
WWW.DAVISFLOYD.COM

3229 W. MONTAGUE AVENUE
NORTH CHARLESTON, SC 29418
(843) 554-8162

REV. NO.	BY	DATE	DESCRIPTION OF REVISION
4			
3			
2			
1			

DGN. AMS DATE
R/W DATE
CHK. GTB DATE

GEORGETOWN COUNTY
ENGINEERED ROADS PROGRAM

PETIGRU DRIVE
SEEDING DETAIL SHEET

NTS

STATE	COUNTY	D&F PROJECT NO.	ROAD NAME	SHEET NO.	TOTAL SHEETS
S.C.	GEORGETOWN	31519.11	PETIGRU DRIVE	D06	

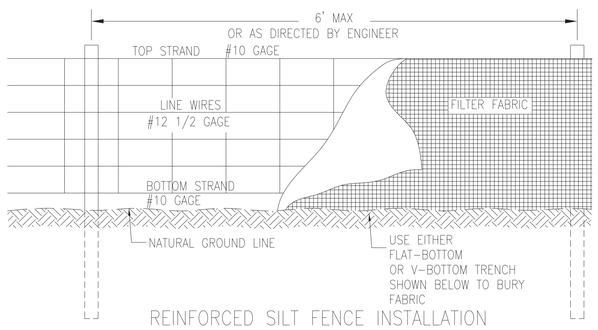

REINFORCED SILT FENCE INSTALLATION

REINFORCED SILT FENCE

1. WOVEN WIRE FENCE SHALL BE REQUIRED WHERE SPECIFIED AND AS A BACKING FOR FILTER FABRIC WITH AN ELONGATION AS DETERMINED BY ASTM D 1682, OF 50% OR GREATER. THE WIRE FENCE SHALL BE A MINIMUM OF 32 INCHES IN WIDTH AND SHALL HAVE A MINIMUM OF 6 LINE WIRES WITH 12 INCH STAY SPACING.
2. STEEL POST SHALL BE A MINIMUM OF 5 FEET LONG, WEIGH A MINIMUM OF 1.3 POUNDS/FOOT, AND HAVE PROJECTIONS FOR FASTENING THE WIRE OR THE FABRIC TO THE POST. STEEL POST SHALL ALSO HAVE A METAL PLATE DRIVEN TO THE PROPER DEPTH. THE PLATE WILL BE BELOW GROUND TO A DEPTH DIRECTED BY THE ENGINEER, WITH 1 TO 2 INCHES OF THE POST PROTRUDING ABOVE THE TOP OF THE WIRE FENCE OR FABRIC BEING IDEAL, BUT IN ANY CASE, NO MORE THAN 3 FEET OF THE POST SHALL PROTRUDE ABOVE THE GROUND.
3. FABRIC SHALL BE ATTACHED TO WOOD POST USING #9 WIRE STAPLES 1-1/2 INCHES LONG AND TO STEEL POST USING TIE WIRES. NUMBER AND LOCATION OF FASTENERS WILL BE AS DIRECTED BY THE ENGINEER IN A MANNER TO PREVENT SAGGING OR TEARING OF THE FABRIC BUT IN ALL CASES, AFFIXED TO THE POST IN NO LESS THAN FOUR PLACES. THE FILTER FABRIC WILL BE TIED TO THE WOVEN WIRE FENCE AS DIRECTED BY THE ENGINEER IN SUCH A MANNER TO PREVENT SAGGING OR TEARING OF THE FABRIC.
4. WHEN THE TEMPORARY SILT FENCE IS REQUIRED TO RUN NEXT TO AND PARALLEL WITH THE CONSTRUCTION FENCE, THE FILTER FABRIC MAY BE ATTACHED TO THE CONSTRUCTION FENCE INSTEAD OF INSTALLING A SEPARATE SILT FENCE. SEE DETAIL BELOW.
5. REFER TO SC-03 SILT FENCE NOTES FOR INSTALLATION, INSPECTION AND MAINTENANCE OF SILT FENCE.

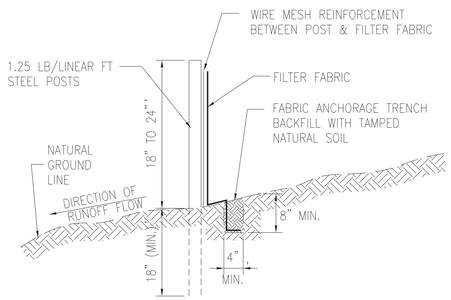

FLAT-BOTTOM
TRENCH DETAIL

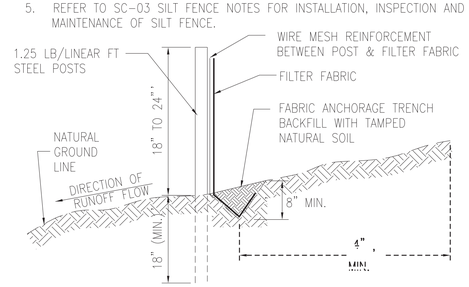

V-BOTTOM
TRENCH DETAIL

SILT FENCE DETAIL

WHEN AND WHERE TO USE IT
SILT FENCE IS APPLICABLE IN AREAS:

- WHERE THE MAXIMUM SHEET OR OVERLAND FLOW PATH LENGTH TO THE FENCE IS 100-FEET.
- WHERE THE MAXIMUM SLOPE STEEPNESS (NORMAL [PERPENDICULAR] TO FENCE LINE) IS 2H:1V.
- THAT DO NOT RECEIVE CONCENTRATED FLOWS GREATER THAN 0.5 CFS.

DO NOT PLACE SILT FENCE ACROSS CHANNELS OR USE IT AS A VELOCITY CONTROL BMP.

MATERIALS

STEEL POSTS

1. USE 48-INCH LONG STEEL POSTS THAT MEET THE FOLLOWING MINIMUM PHYSICAL REQUIREMENTS:

   - COMPOSED OF HIGH STRENGTH STEEL WITH MINIMUM YIELD STRENGTH OF 50,000 PSI.
   - HAVE A STANDARD "T" SECTION WITH A NOMINAL FACE WIDTH OF 1.38-INCHES AND NOMINAL "T" LENGTH OF 1.48-INCHES.
   - WEIGH 1.3 POUNDS PER FOOT (± 8%).
   - HAVE A SOIL STABILIZATION PLATE WITH A MINIMUM CROSS SECTION AREA OF 17-SQUARE INCHES ATTACHED TO THE STEEL POSTS.
   - PAINTED WITH A WATER BASED BAKED ENAMEL PAINT.

2. USE STEEL POSTS WITH A MINIMUM LENGTH OF 4-FEET, WEIGHING 1.25 POUNDS PER LINEAR FOOT (± 8%) WITH PROJECTIONS TO AID IN FASTENING THE FABRIC. EXCEPT WHEN HEAVY CLAY SOILS ARE PRESENT ON SITE, STEEL POSTS WILL HAVE A METAL SOIL STABILIZATION PLATE WELDED NEAR THE BOTTOM SUCH THAT WHEN THE POST IS DRIVEN TO THE PROPER DEPTH, THE PLATE WILL BE BELOW THE GROUND LEVEL FOR ADDED STABILITY. THE SOIL PLATES SHOULD HAVE THE FOLLOWING CHARACTERISTICS:

   - BE COMPOSED OF MINIMUM 15 GAUGE STEEL.
   - HAVE A MINIMUM CROSS SECTION AREA OF 17-SQUARE INCHES.

GEOTEXTILE FILTER FABRIC
FILTER FABRIC IS:
COMPOSED OF FIBERS CONSISTING OF LONG CHAIN SYNTHETIC POLYMERS COMPOSED OF AT LEAST 85% BY WEIGHT OF POLYOLEFINS, POLYESTERS, OR POLYAMIDES. FORMED INTO A NETWORK SUCH THAT THE FILAMENTS OR YARNS RETAIN DIMENSIONAL STABILITY RELATIVE TO EACH OTHER. FREE OF ANY TREATMENT OR COATING WHICH MIGHT ADVERSELY ALTER ITS PHYSICAL PROPERTIES AFTER INSTALLATION. FREE OF DEFECTS OR FLAWS THAT SIGNIFICANTLY AFFECT ITS PHYSICAL AND/OR FILTERING PROPERTIES. CUT TO A MINIMUM WIDTH OF 36 INCHES.

USE ONLY FABRIC APPEARING ON SCDOT APPROVAL SHEET #34 MEETING THE REQUIREMENTS OF THE MOST CURRENT EDITION OF THE SCDOT STANDARD SPECIFICATIONS FOR HIGHWAY CONSTRUCTION.

INSTALLATION
EXCAVATE A TRENCH APPROXIMATELY 6-INCHES WIDE AND 6-INCHES DEEP WHEN PLACING FABRIC BY HAND. PLACE 12-INCHES OF GEOTEXTILE FABRIC INTO THE 6-INCH DEEP TRENCH, EXTENDING THE REMAINING 6-INCHES TOWARDS THE UPSLOPE SIDE OF THE TRENCH. BACKFILL THE TRENCH WITH SOIL OR GRAVEL AND COMPACT.BURY 12-INCHES OF FABRIC INTO THE GROUND WHEN PNEUMATICALLY INSTALLING SILT FENCE WITH A SLICING METHOD. PURCHASE FABRIC IN CONTINUOUS ROLLS AND CUT TO THE LENGTH OF THE BARRIER TO AVOID JOINTS. WHEN JOINTS ARE NECESSARY, WRAPPED THE FABRIC TOGETHER AT A SUPPORT POST WITH BOTH ENDS FASTENED TO THE POST, WITH A 6-INCH MINIMUM OVERLAP. INSTALL POSTS TO A MINIMUM DEPTH OF 24-INCHES. INSTALL POSTS A MINIMUM OF 1- TO 2- INCHES ABOVE THE FABRIC, WITH NO MORE THAN 3-FEET OF THE POST ABOVE THE GROUND. SPACE POSTS TO MAXIMUM 6-FEET CENTERS. ATTACH FABRIC TO WOOD POSTS USING STAPLES MADE OF HEAVY-DUTY WIRE AT LEAST 1½-INCH LONG, SPACED A MAXIMUM OF 6-INCHES APART. STAPLE A 2-INCH WIDE LATHE OVER THE FILTER FABRIC TO SECURELY FASTEN IT TO THE UPSLOPE SIDE OF WOODEN POSTS. ATTACH FABRIC TO THE STEEL POSTS USING HEAVY-DUTY PLASTIC TIES THAT ARE EVENLY SPACED AND PLACED IN A MANNER TO PREVENT SAGGING OR TEARING OF THE FABRIC. IN CALL CASES, TIES SHOULD BE AFFIXED IN NO LESS THAN 4 PLACES. INSTALL THE FABRIC A MINIMUM OF 24-INCHES ABOVE THE GROUND. WHEN NECESSARY, THE HEIGHT OF THE FENCE ABOVE GROUND MAY BE GREATER THAN 24-INCHES. IN TIDAL AREAS, EXTRA SILT FENCE HEIGHT MAY BE REQUIRED. THE POST HEIGHT WILL BE TWICE THE EXPOSED POST HEIGHT. POST SPACING WILL REMAIN THE SAME AND EXTRA HEIGHT FABRIC WILL BE 4-, 5-, OR 6-FEET TALL. LOCATE SILT FENCE CHECKS EVERY 100 FEET MAXIMUM AND AT LOW POINTS. INSTALL THE FENCE PERPENDICULAR TO THE DIRECTION OF FLOW AND PLACE THE FENCE THE PROPER DISTANCE FROM THE TOE OF STEEP SLOPES TO PROVIDE SEDIMENT STORAGE AND ACCESS FOR MAINTENANCE AND CLEANOUT.

INSPECTION AND MAINTENANCE
INSPECT EVERY SEVEN CALENDAR DAYS AND WITHIN 24-HOURS AFTER EACH RAINFALL EVENT THAT PRODUCES ½-INCHES OR MORE OF PRECIPITATION. CHECK FOR SEDIMENT BUILDUP AND FENCE INTEGRITY. CHECK WHERE RUNOFF HAS ERODED A CHANNEL BENEATH THE FENCE, OR WHERE THE FENCE HAS SAGGED OR COLLAPSED BY FENCE OVERTOPPING. IF THE FENCE FABRIC TEARS, BEGINS TO DECOMPOSE, OR IN ANY WAY BECOMES INEFFECTIVE, REPLACE THE SECTION OF FENCE IMMEDIATELY. REMOVE SEDIMENT ACCUMULATED ALONG THE FENCE WHEN IT REACHES 1/3 THE HEIGHT OF THE FENCE, ESPECIALLY IF HEAVY RAINS ARE EXPECTED. REMOVE TRAPPED SEDIMENT FROM THE SITE OR STABILIZE IT ON SITE. REMOVE SILT FENCE WITHIN 30 DAYS AFTER FINAL STABILIZATION IS ACHIEVED OR AFTER TEMPORARY BEST MANAGEMENT PRACTICES (BMPS) ARE NO LONGER NEEDED. PERMANENTLY STABILIZE DISTURBED AREAS RESULTING FROM FENCE REMOVAL.

SOUTH CAROLINA
DAVIS & FLOYD, INC.
No. C00538
CERTIFICATE OF AUTHORIZATION

SOUTH CAROLINA
PROFESSIONAL ENGINEER
2/15/18
No. 20214
GEORGE TILLEY BULL

DAVIS & FLOYD
SINCE 1954
WWW.DAVISFLOYD.COM

3229 W. MONTAGUE AVENUE
NORTH CHARLESTON, SC 29418
(843) 554-8102

REV. NO.	BY	DATE	DESCRIPTION OF REVISION
4			
3			
2			
1			

DGN. AMS DATE
R/W DATE
CHK. GTB DATE

GEORGETOWN COUNTY
ENGINEERED ROADS PROGRAM
PETIGRU DRIVE
SILT FENCE DETAIL SHEET
NTS

STATE	COUNTY	D&F PROJECT NO.	ROAD NAME	SHEET NO.	TOTAL SHEETS
S.C.	GEORGETOWN	31519.11	PETIGRU DRIVE	D07	

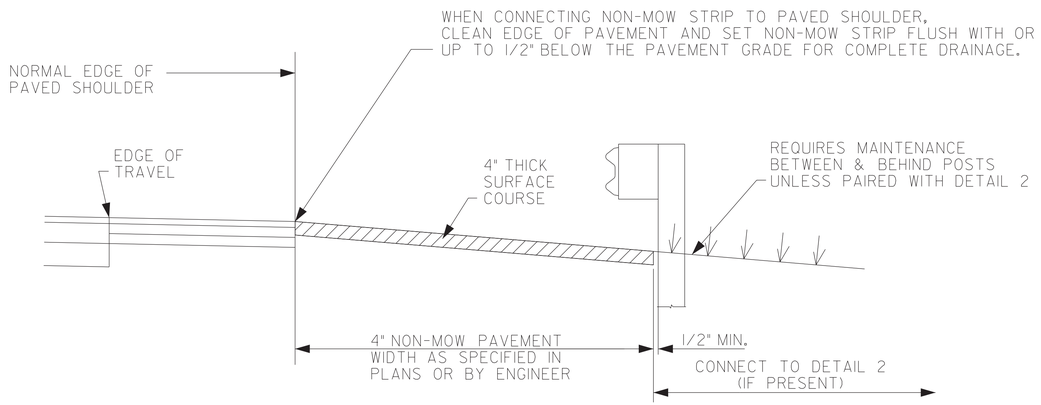

DETAIL 1

NON-MOW STRIP IN FRONT OF POSTS

NOTES:

1. INSTALL NON-MOW STRIPS UNDER GUARDRAIL ONLY WHEN SPECIFIED IN THE PLANS OR SPECIAL PROVISIONS

2. CONSTRUCT THE NON-MOW STRIP USING A MINIMUM OF 4" HMA SURFACE COURSE, 4" CLASS 2500 PORTLAND CEMENT, OR A PROPRIETARY NON-MOW STRIP PRODUCT IF APPROVED IN ADVANCE BY THE ENGINEER

3. FOR ASPHALT AND PORTLAND CEMENT STRIPS, PLACE LEAVE-OUTS AT EACH POST ALONG THE ENTIRE LENGTH OF THE GUARDRAIL INCLUDING TERMINAL AND TRANSITIONAL SECTIONS. INSTALL LEAVE-OUT DETAIL AS A CONTINUOUS STRIP THROUGH PORTIONS OF RAIL WITH 1'-6.75" (CRITICAL OFFSET) POST SPACING.

4. PROVIDE AT LEAST 7 INCHES OF LEAVE-OUT BEHIND EACH POST. FILL LEAVE-OUTS WITH NO MORE THAN 2 INCHES OF LOW STRENGTH GROUT OR FLOWABLE FILL.

5. LOCATE THE NON-MOW STRIP ALONG THE ENTIRE LENGTH OF THE GUARDRAIL AND EXTEND 5' BEYOND THE LEADING AND TRAILING END TREATMENT IMPACT HEAD/FLARE END/NOSE/ETC OR TO THE LIMITS SHOWN IN THE PROJECT PLANS.

6. IF DETAILS INCLUDE NON-MOW STRIP CONNECTED TO PAVEMENT, USE ONLY MATERIALS COMPATIBLE WITH ROADWAY PAVEMENT.

PROPRIETARY MATERIALS

P1. FOLLOW THE MANUFACTURER'S INSTALLATION INSTRUCTIONS TO COVER THE SAME GEOMETRY SPECIFIED IN THE PAY ITEMS.

SOUTH CAROLINA DAVIS & FLOYD, INC. No. C00538 CERTIFICATE OF AUTHORIZATION

SOUTH CAROLINA REGISTERED PROFESSIONAL ENGINEER 4/16/18 No. 20214 GEORGE TILLEY BULLOCK

DAVIS & FLOYD

SINCE 1954

WWW.DAVISFLOYD.COM

3229 W. MONTAGUE AVENUE
NORTH CHARLESTON, SC 29418
(843) 554-8602

REV. NO.	BY	DATE	DESCRIPTION OF REVISION
4			
3			
2			
1			

DGN. AMS DATE
R/W DATE
CHK. GTB DATE

GEORGETOWN COUNTY
ENGINEERED ROADS PROGRAM

PETIGRU DRIVE
PAVING UNDER GUARDRAIL
DETAIL SHEET

NTS